TORQ STORM®
BILLET SUPERCHARGERS



LS TWIN SUPERCHARGER 2XR

ARP-K-GM-LS2XRA

ARP-K-GM-LS2XRAC

STEP 1

Disconnect battery.

Install head plate to passenger side head (ARP-GM10030) using four M10 x 1.5 x 30mm bolts and washers. Insert the bolt in the head plate hole that goes behind the waterpump first, or you will not be able to get it in the hole.

Tighten to 29 ft lbs



STEP 2

Install straight water neck (ARP-WTR-LS-1) with desired thermostat (factory type) . Re use factory M6 bolts.

Tighten to 11 ft lbs

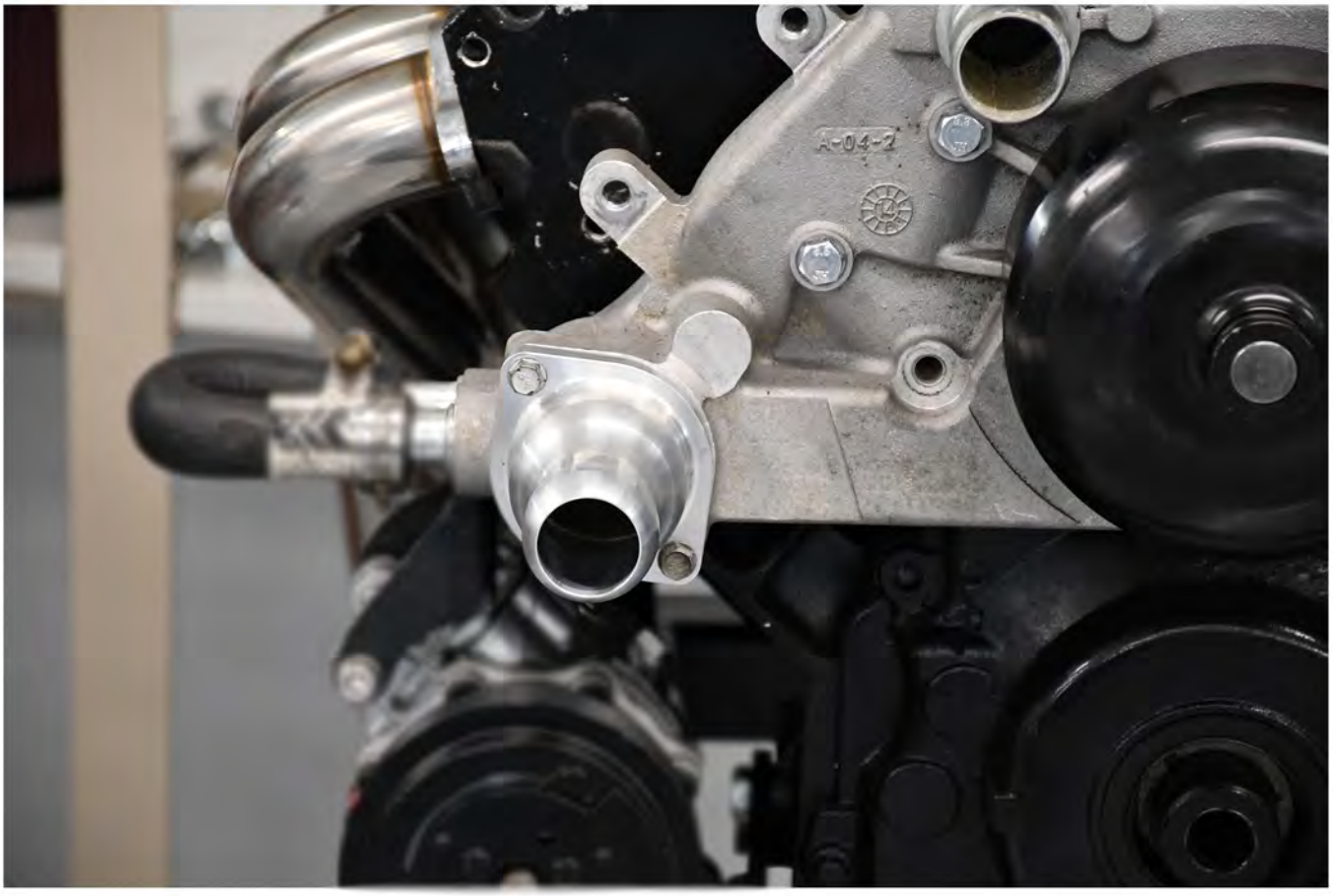

STEP 3



Install ac bracket (ARP-GM10080-A) using (2) M10X1.5X30MM bolts and (2) .450 spacers. Then install lower bracket (ARP-GM10080-B) using (2) M10X1.5X25MM bolts. Leave loose until compressor is mounted.



Next, install the a/c tensioner (ARP-89258) with (2) M8X1.25X40MM bolts and (2) .500 SPACERS.

Torque nut and bolt to 12 ft lbs

STEP 4

Install Sanden SD7 a/c compressor (HLY-199-102) using (1) M8X1.25X40MM bolt and nut on the back ear. You may have to press the colar in or out to meet the bracket before tightening.

Then (2) M8X1.25X25MM bolts on front.

In some circumstances, you may need to shim the compressor to align with the balancer pulley.

Torque to 12 ft lbs

Torque the (4) bracket mounting bolts to 22 ft lbs

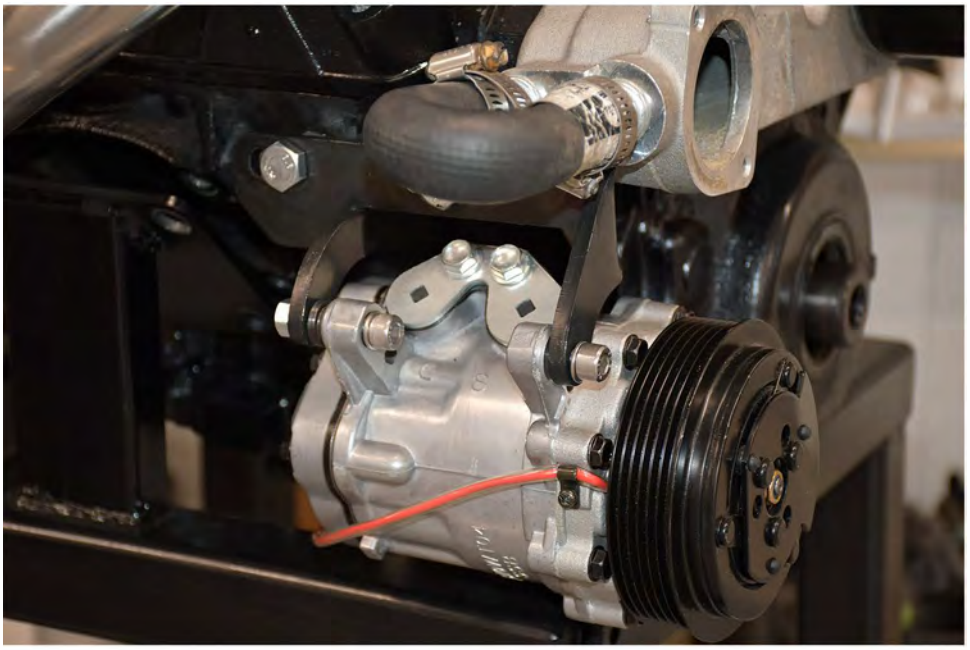



STEP 5

Mount the drivers side head plate (ARP-GM10077) using (3) M10 x 1.5 x 25 bolts

Torque to 29 ft lbs

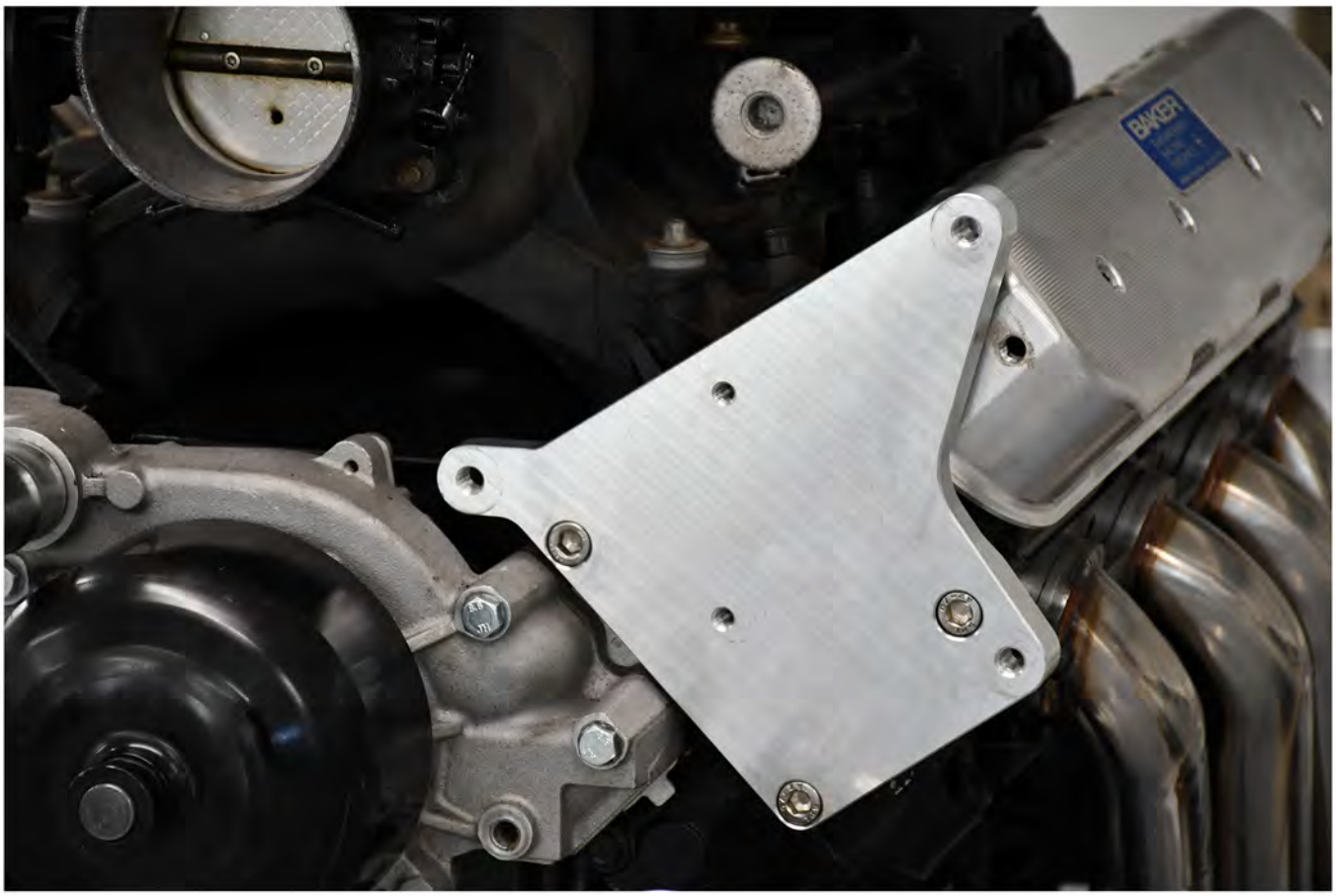

STEP 6

Mount the power steering pump on the head plate using

(2) 5/16-18 x 2-3/4.

Torque to 12 ft lbs



STEP 7

Mount the alternator with bracket (ARP-GM10079). Using (1) M8X1.25X110MM bolt through 2.815" spacer.



Next (1) M10X1.5X115MM bolt through the alternator and 1.2" spacer.



And then (1) M10X1.5X60MM from the backside of the alternator, threading into the bracket.



STEP 8



Measure the drill bit through your allignment tool. Make sure it is through .850" from the end of the taper of the drill bit to the inside face of the tool. Wrap a piece of tape around the back side of the tool on the drill bit.

STEP 9



Slide the bit out of the tool. Check your measurement.

From the end of the taper to the tape should be 1.650".

STEP 10

Install the ATI balancer (ATI-918853). Refer to instructions provided by ATI.

Install the pin tool with supplied bolt.

Snug down so tool is locked in position while drilling.



STEP 11

Install drill bit into your drill of choice, a 90 degree air drill works well for fitting into tight areas. Make sure you drill untill the tape hits the surface of the tool. Repeat process for the other hole.

Clean shavings from area.



STEP 12
For ATI Installation

Install the shorter supplied pins into drilled holes. Verify the pins are both flush or below the surface of the Bolt/Washer surface of the pulley. Apply sealant over the keyway so oil doesn't seap out.



STEP 13

Apply red loctite and install supplied bolt

Tighten to factory torque specs

GM 219 ft. lbs



STEP 14

Install the balancer pulley (ARP-GM68055) using (3) 3/8-16 bolts (provided with the ATI).

Apply blue Loctite

Torque to 18 ft lbs



STEP 15

Install the passenger side supercharger bracket. (ARP-GM10031) using (2) M10X1.5X120 bolts and (2) M10X1.5X80MM bolts through the accessory tensioner (ARP-89338).

To get to the one 120mm bolt you must loosen and swing the tensioner away from the bolt hole.

(2) 3.2" Spacers behind the bracket will mount the two brackets together.



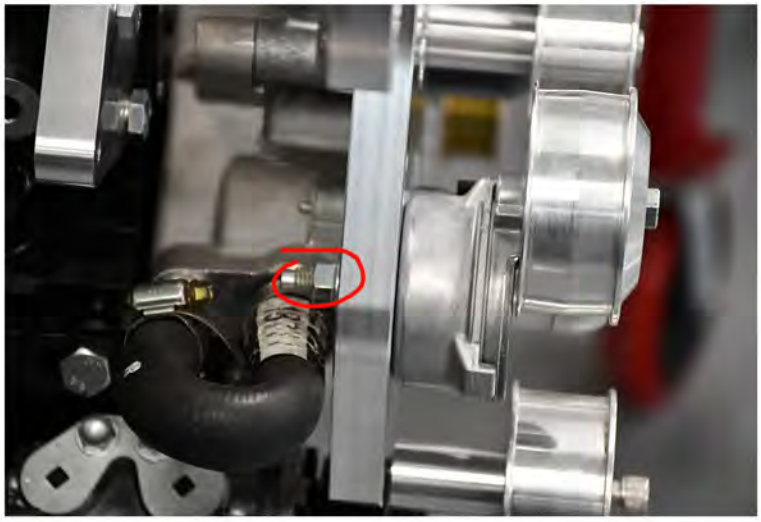

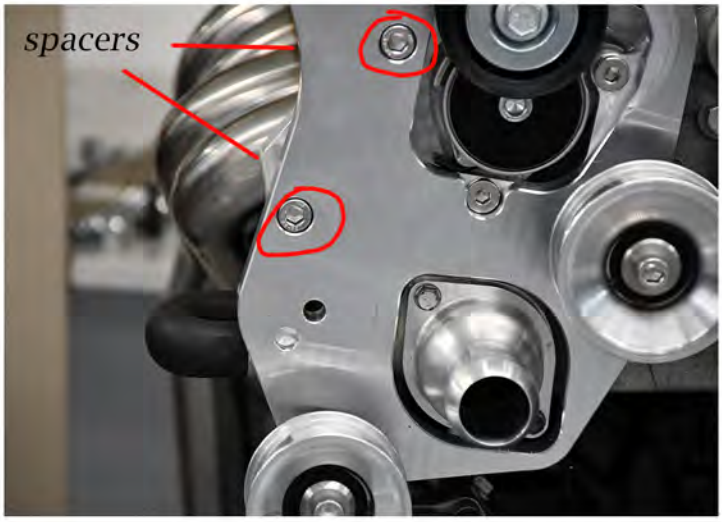

STEP 16

Install the a/c belt (K040370) and accessory belt (5060805).



STEP 17

Install drivers side supercharger bracket (ARP-GM10076) with (3) M10X1.5X130MM bolts and (3) 4.3" Spacers. In order to gain access to the lower right bolt you must loosen up and swing the tensioner away.

Torque to 29 ft lbs

Re-position the tensioner and re-torque the nut to 18 ft lbs

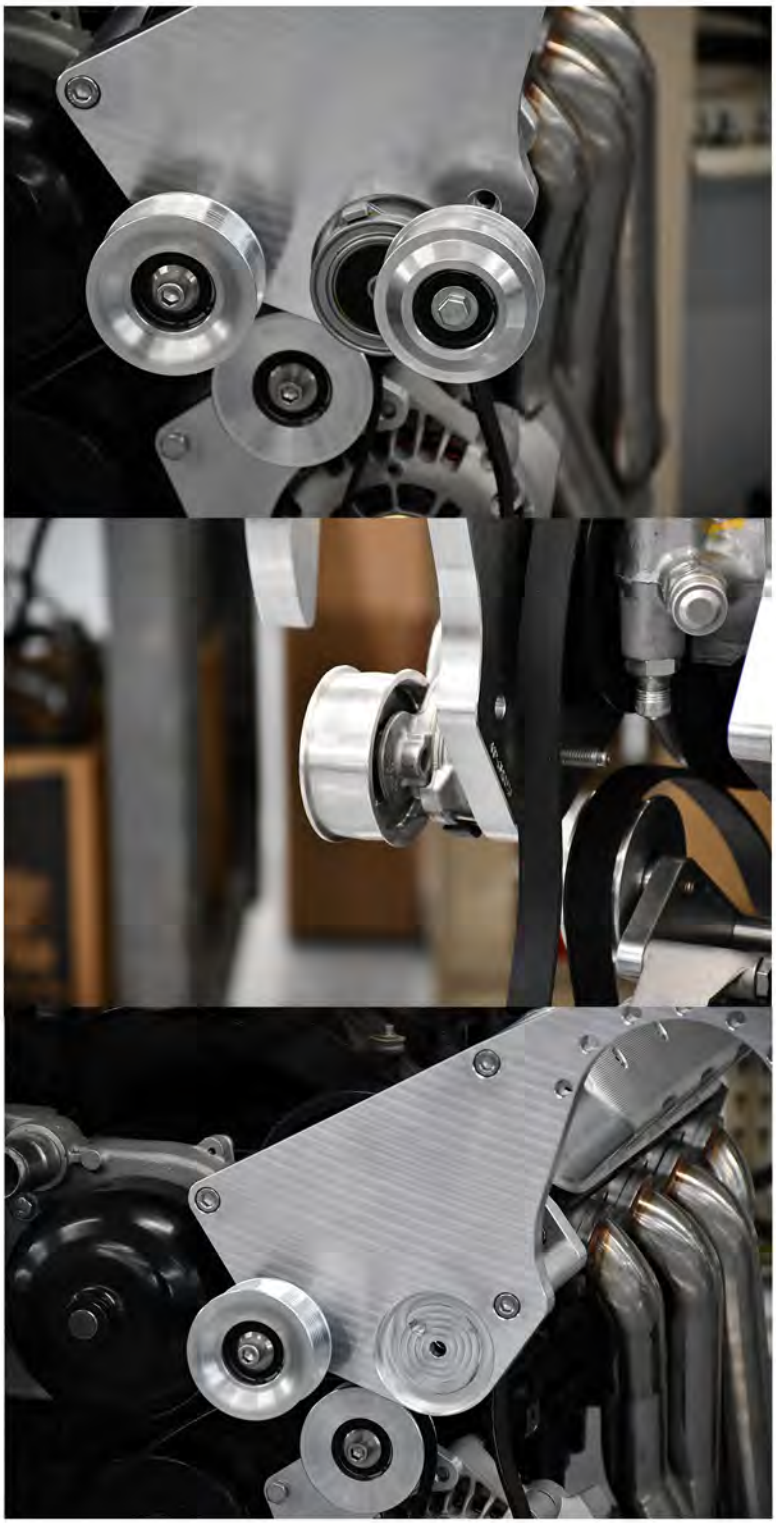

STEP 18

Install (1) Supercharger on the drivers side bracket.

For this side place the spacer (horse shoe shaped) (ARP-GM10081) between the bracket and supercharger. (7) 3/8-16x 1 3/4" bolts and AN washers.

Torque to 29 ft lbs



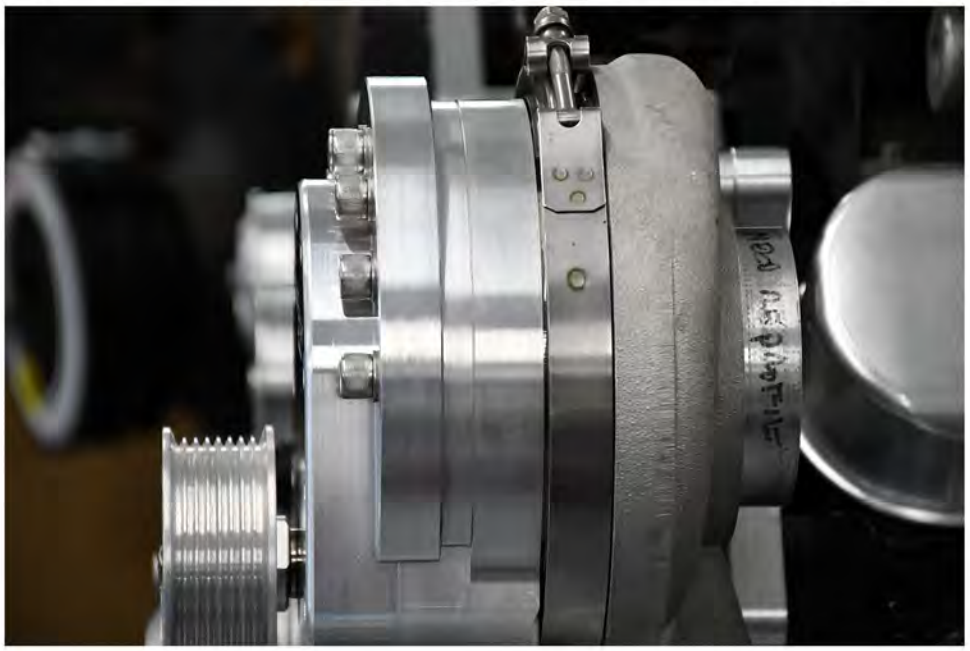

STEP 19

Install (1) Supercharger on pass side bracket with (7) 3/8-16 x 1 1/4" bolts and AN washers.

Torque to 29 ft lbs

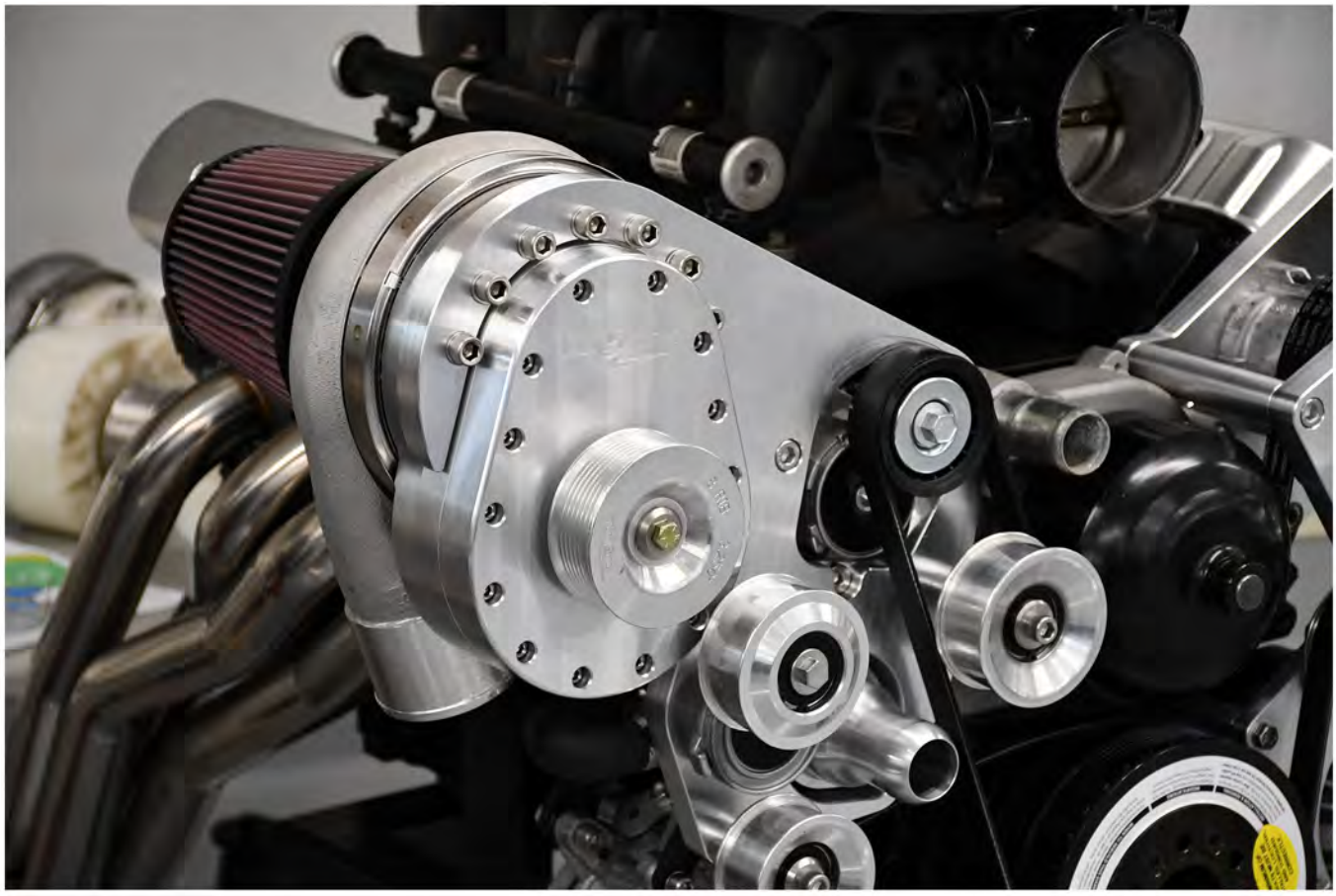

STEP 20

Install (1) Supercharger 8 rib belt on the passenger side supercharger first. Then (1) supercharger belt on the drivers side.



STEP 21

Install the air filters on the superchargers with the 3.5" clamps.





STEP 22

Plumb the supercharger outlet according to your vehicle, you may have to adjust the supercharger scroll for proper alignment to supercharger. Note: Do not over tighten V-band clamp on scroll. Tighten clamp just until scroll cannot be rotated. Approx. 1/8"-1/4" threads showing past nut on clamp.

Hook up both ARP-BOV-TORQ 52 BOV with ARP-TEMP-BUNG1 aluminum weld in bung in between the supercharger and throttle body. Hook up to vacuum source off of the intake with supplied vacuum line. Cut to length.



- *Replace all spark plugs with one or two heat ranges cooler.*
- *Fuel/ Ignition managment system must be tuned when installing Torqstorm Supercharger.*
- *Reconnect battery*
- *Double check all fittings, bolts, clamps. Make sure all wires and lines are properly secured with clamps or wire ties .*
- *Make sure fuel tank is filled with 91 octane or higher fuel.*
- *Start engine and allow to idle a few minutes then shut down.*
- *Recheck to be sure that no hoses, wires, ect are near the exhaust, headers, or supercharger components.*
- *Recheck tune before commencing test drive.*
- *After test drive examine all bolts, belts and check for leaks or running issues before finishing with the vehicle.*
- *Change your oil in the S/C every 10k miles or once a year. Failure to run Torqstorm approved oil will void warranty.* *Order direct from Torqstorm Part NO ARP-OIL-MTL*
- *Fill out warranty card and send it in 30 days from arrival of supercharger to qualify.*

Failure to do so may affect your limited lifetime warranty.

Additional information for Boost

- It is suggested to run a wideband o2 sensor to monitor correct air/fuel ratio. 11.5 is ideal for 91 octane or higher pump gas.

- PLEASE TAKE SPECIAL NOTE: Operating the vehicle without all the sub assemblies completed and properly installed and working may cause FAILURE OF MAJOR ENGINE COMPONENTS.

- If you have any questions or concerns contact us at sales@torqstorm.com

- Torqstorm superchargers come from the factory filled with 6 oz of ARP-OIL-MTL

-Supercharger is ready to run

HEAD BRACKET LAYOUT

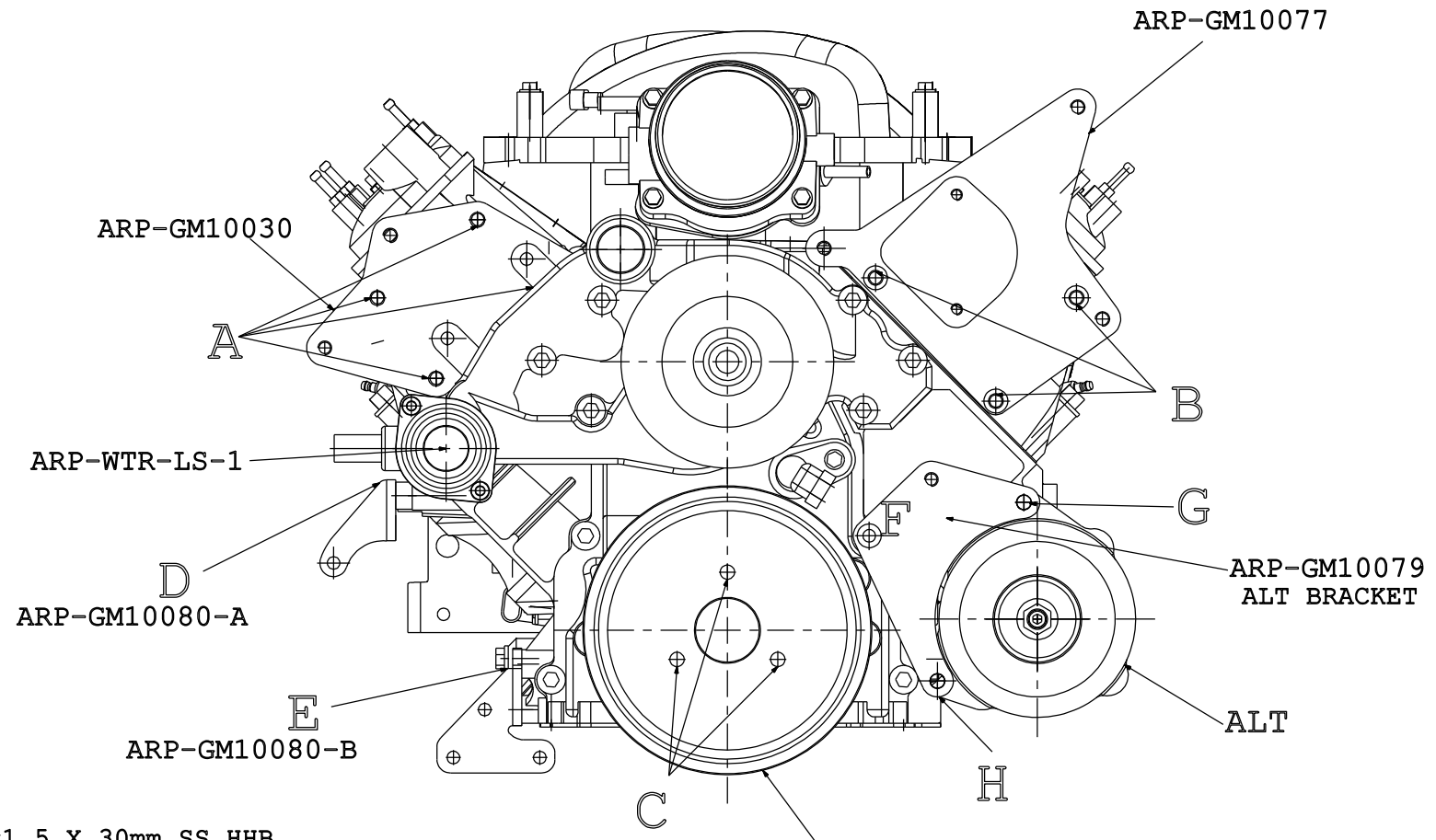

A = 4 @ M10x1.5 X 30mm SS HHB
B = 3 @ M10x1.5 X 25mm SS SHCS
C = 3 @ 3/8-16 X 2 SS SHCS
D = 2 @ ARP-S-75-0450 SPACERS
D = 2 @ M10x1.5 X 30mm SS SHCS
E = 2 @ M10x1.5 x 25mm SS SHCS
F = 1 @ ARP-S-75-2625 SPACER
F = 1 @ M8x1.125 X 100mm SS SHCS
G = M10x1.5 X 80mm SS HHB WASHER & NUT
H = 1 @ ARP-S-75-1200 SPACER
H = 1 @ M10x1.5 X 115 SS HHB

08/10/2020

Description
HEAD BRACKET LAYOUT

Part #
ARP-K-GM-LS-2XRAC

TORQSTORM® BILLET SUPERCHARGERS

AC PUMP & POWER STEERING PUMP LAYOUT

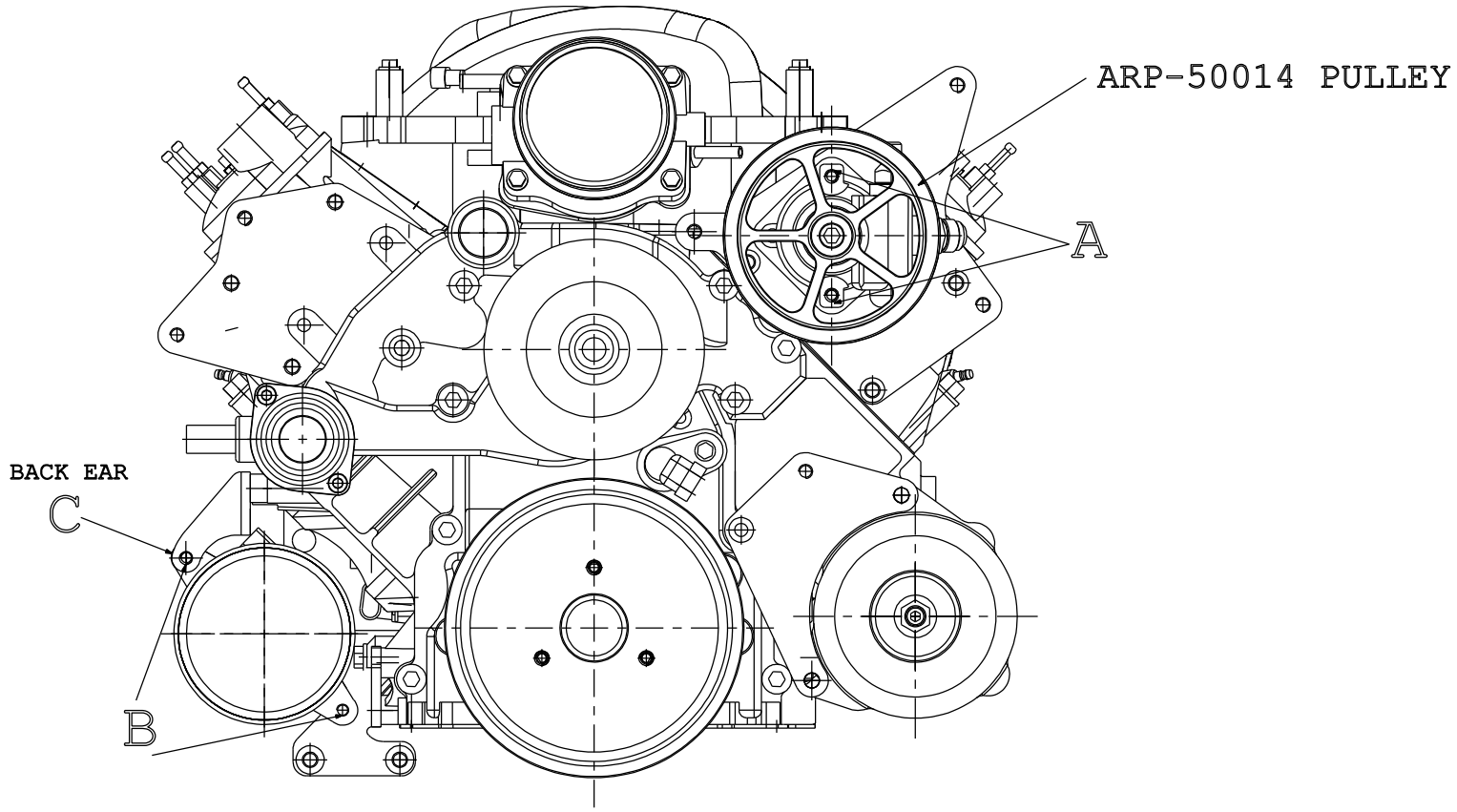

A = 2 @ 5/16-18 X 2-3/4 SS SHCS
B = 2 @ M8x1.25 X 25mm SS SHCS
C = 1 @ M8x1.25 X 40mm SS SHCS W/NUT

Description
AC & PS PUMP LAYOUT

Part #
ARP-K-GM-LS-2XRAC

TORQSTORM® BILLET SUPERCHARGERS

08/10/2020

ACCESSORY BELT ROUTING

STOCK LS1 TENSIONER
ARP-89338

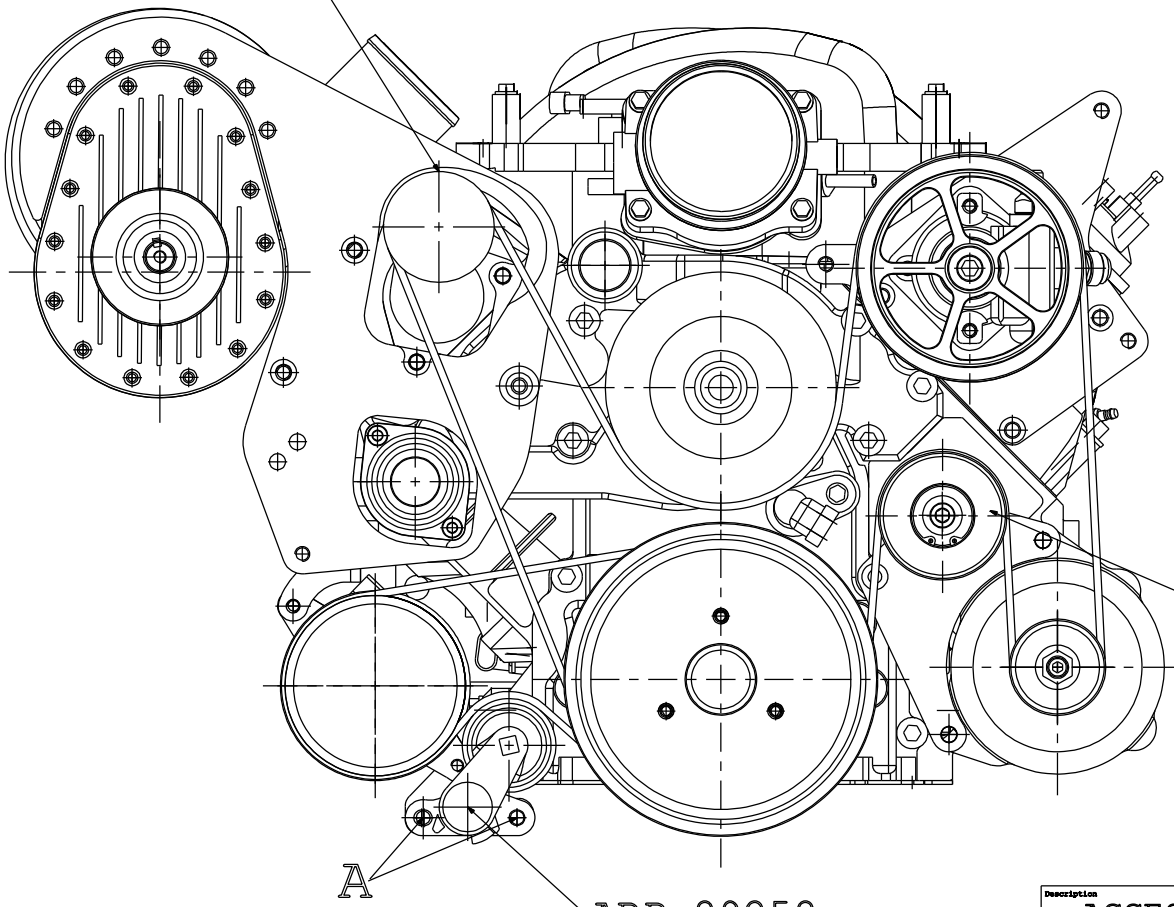

ARP-50001-N
WITH ARP-IS-0620
3/8-16 X 2.0 SS SHCS

ARP-89258

A = 2 @ ARP-S-750-0500 SPACER
A = 2 @ M8x1.25 X 40mm SS SHCS & NUTS

ACCESSORY BELT = GATES K060806 / DAYCO 5060805
AC BELT = GATES K040370 / DAYCO 5040370

08/10/2020

Description
ACCESSORY BELT ROUTING

Part #
ARP-K-GM-LS-2XRAC

TORQSTORM® BILLET SUPERCHARGERS

SUPERCHARGER BRACKET & SPACER LAYOUT

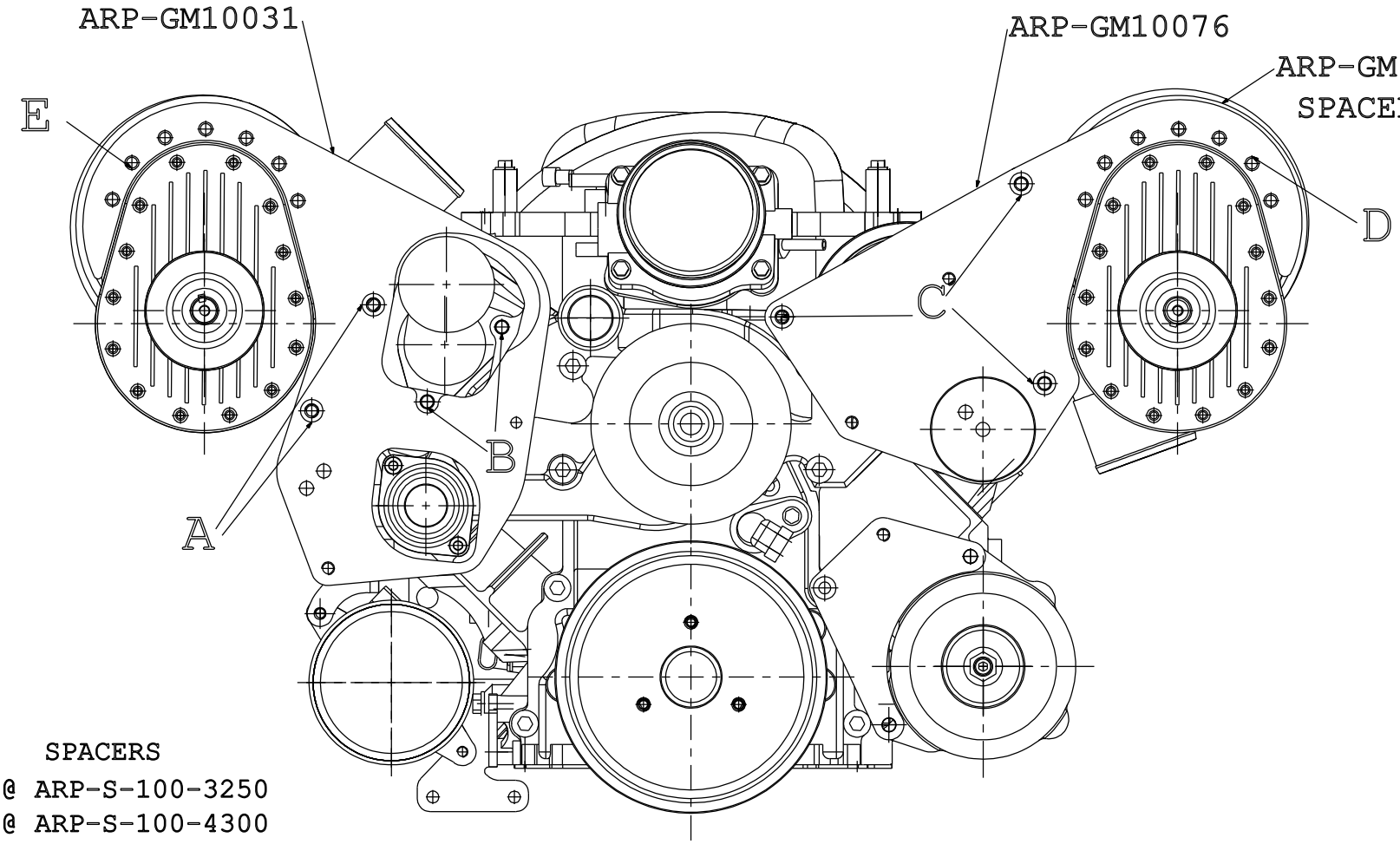

SPACERS

A = 2 @ ARP-S-100-3250
C = 3 @ ARP-S-100-4300

BOLTS

A = 2 @ M10x1.5 X 110mm SS SHCS
B = 2 @ M10x1.5 X 70mm SS SHCS
C = 3 @ M10x1.5 X 130mm SS SHCS
D = 7 @ 3/8-16 X 1-3/4 SS SHCS
E = 7 @ 3/8-16 X 1-1/4 SS SHCS

08/10/2020

Description
SUPERCHARGER BRACKET LAYOUT

Part #
ARP-K-GM-LS-2XRAC

TORQSTORM® BILLET SUPERCHARGERS

SUPERCHARGER BELT ROUTING

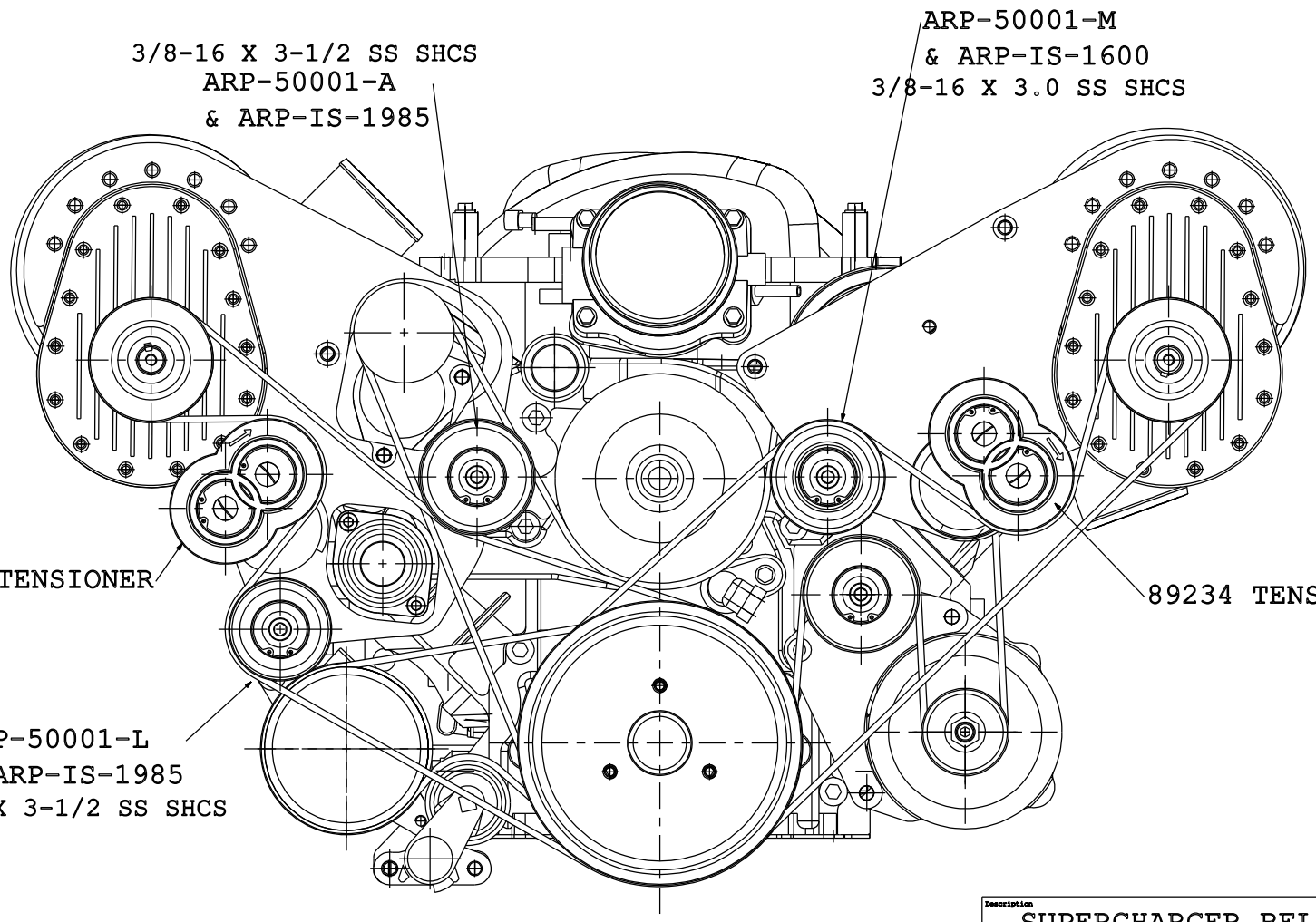

"INSTALL PASSENGER SIDE BELT FIRST"

PASSENGER SIDE SC BELT = GATES K080575 / DAYCO 5080575
DRIVERS SIDE SC BELT = GATES K080560 / DAYCO 5080560

08/10/2020

Description
SUPERCHARGER BELT ROUTING

Part #
ARP-K-GM-LS-2XRAC

TORQSTORM® BILLET SUPERCHARGERS