ARP-K-GM-LS1006 *LS TWIN W/ ACCESSORIES*

INSTALLATION GUIDE



QUALITY AMERICAN MADE SUPERCHARGERS

TORQ STORM® BILLET SUPERCHARGERS

STEP 1

Disconnect battery.

Install head plate to passenger side head using four M10 x 1.5 x 30mm bolts and washers. Insert the bolts and washers into the wholes before installing the plate. This is the only way they will fit behind the waterpump.

Tighten to 29 ft lbs

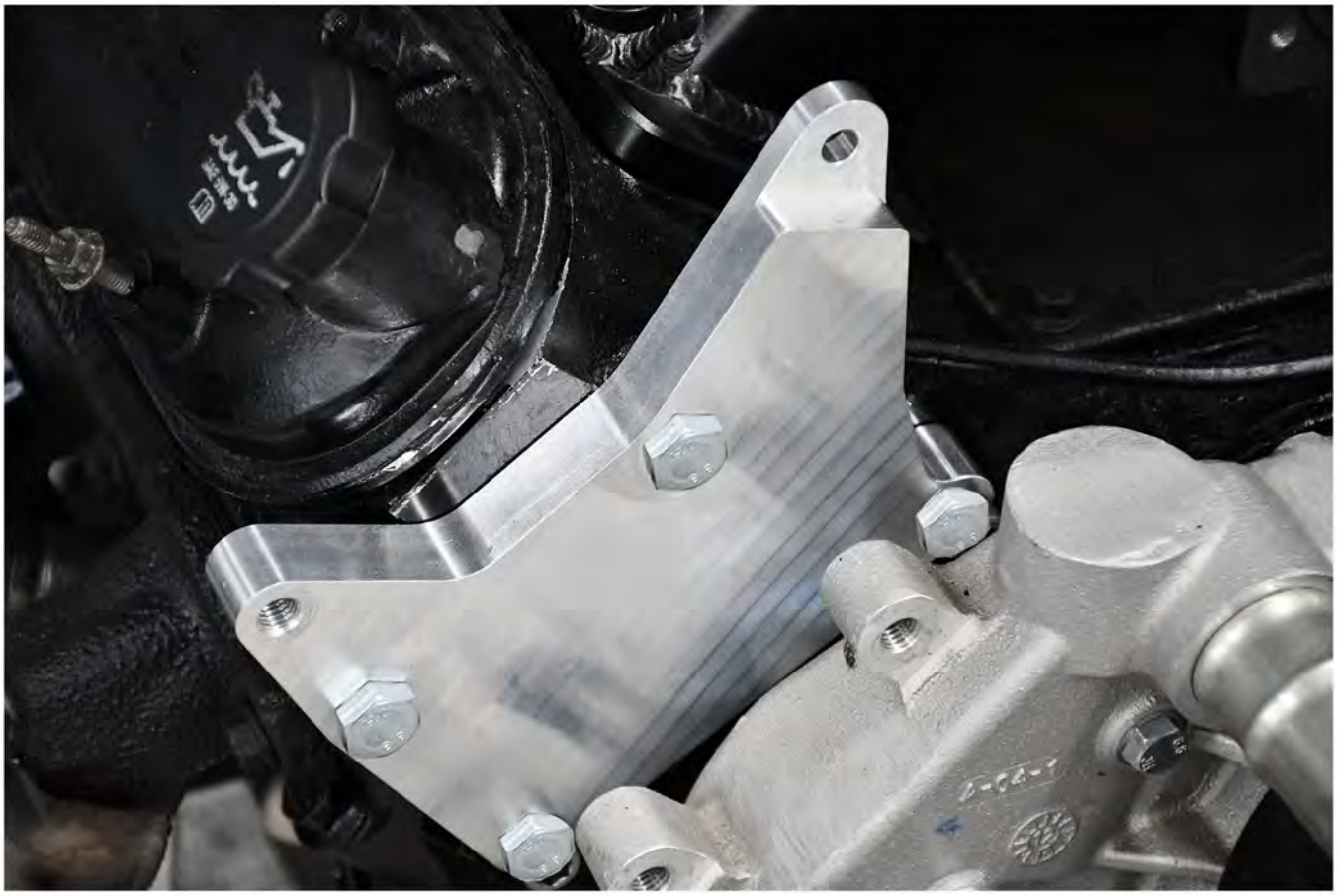

STEP 2

Install head plate on drivers side head with

(2) M10 X 1.5 X 35MM bolts and AN washers.

Tighten to 29 ft lbs

STEP 3

Install the powersteering pump using (2) 5/16 bolts and washers.

Torque to 19 ft lbs.

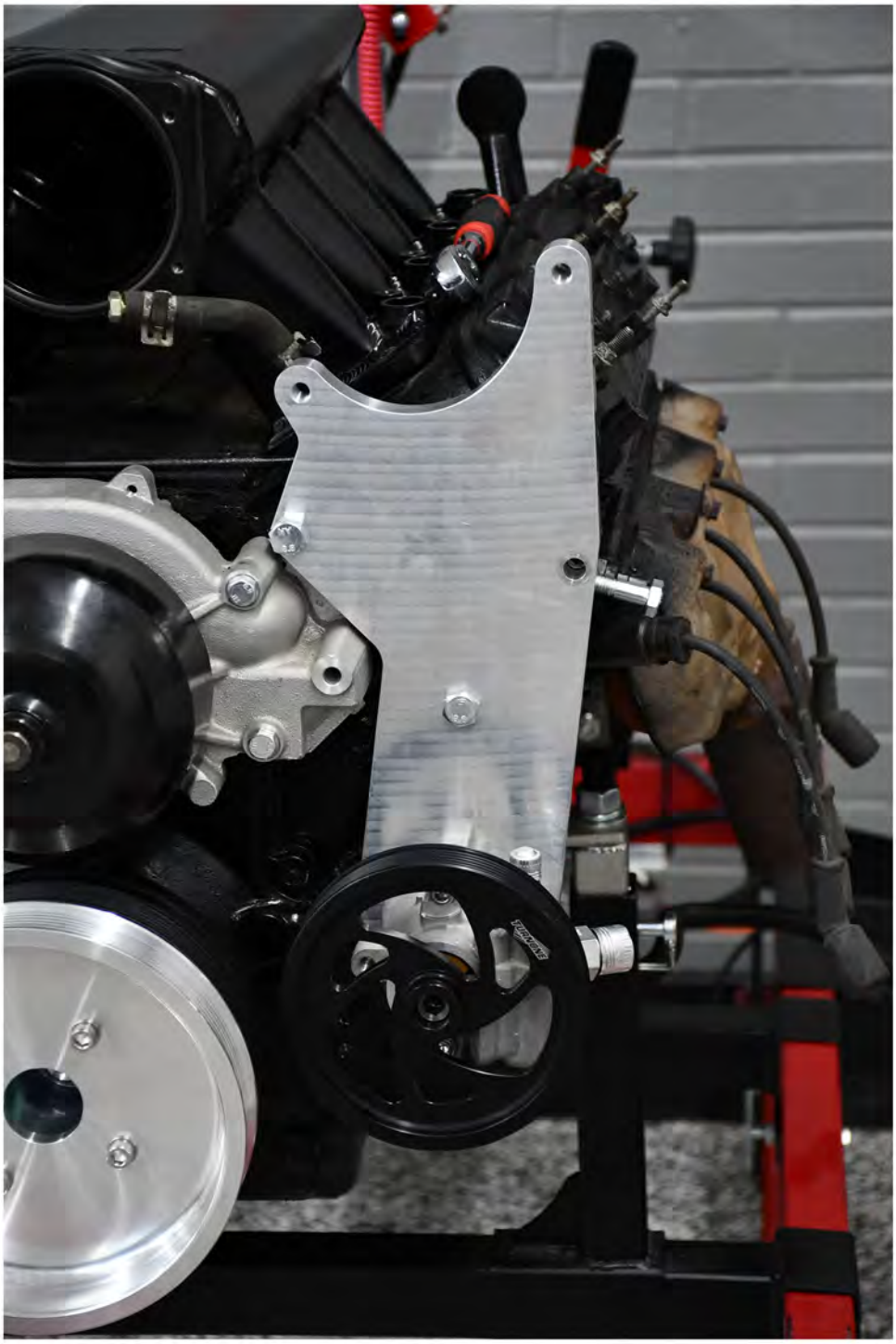

STEP 4

Install the drivers side supercharger bracket. Mount with (1) m10x1.5x100mm bolt and (1) 2.675 spacer. Remove the supercharger tensioner so you can access one of the mounting bolts.

Do not torque down until alterntator is mounted.



STEP 5

Measure the drill bit through your alignment tool. Make sure it is through .850" from the end of the taper of the drill bit to the inside face of the tool. Wrap a piece of tape around the back side of the tool on the drill bit.

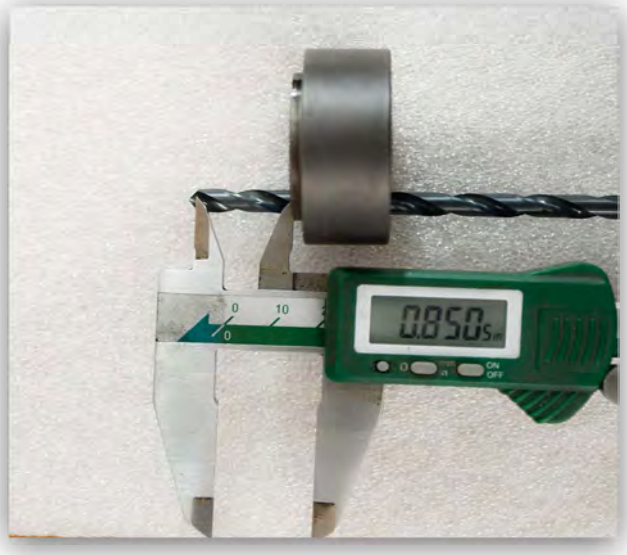

STEP 6

Slide the bit out of the tool. Check your measurement. From the end of the taper to the tape should be 1.650".



STEP 7

Same process for ATI and stock balancer

Install the pin tool with supplied bolt.

Snug down so tool is locked in position while drilling.



STEP 8

Install drill bit into your drill of choice, a 90 degree air drill works well for fitting into tight areas. Make sure you drill untill the tape hits the surface of the tool. Repeat process for the other hole.

Clean shavings from area.



STEP 9
For ATI Installation

Install pins the shorter supplied pins into drilled holes. Verify the pins are both flush or below the surface of the Bolt/Washer surface of the pulley. Apply sealant over the keyway so oil doesn't seap out.



STEP 10

Apply red loctite and install supplied bolt

Tighten to factory torque specs

GM 219 ft. lbs



STEP 11

For stock balancer and hub.



Insert the supplied longer pins into the holes in hub.

Install the hub into the crank face, lining up the drilled holes.

Be sure the hub is seated flat against the crank face.

STEP 12



Apply red loctite and install supplied bolt.

Tighten to factory torque specs

GM 219 ft. lbs

STEP 13



Install supercharger crank pulley with (4) 5/16 bolts and washers.

Torque to 19 ft lbs

STEP 14

Install passenger side supercharger bracket using (2) M10 x 130mm bolts and (2) 3/4" x 3.5" spacers.

Do not torque until after the ac compressor is mounted.





STEP 15

Install the ac compressor using (2) M8 x 20mm bolts and (1) M8 x 50mm bolt and nut to attach the back ear to the head plate.

Torque all M8 bolts to 19 ft lbs and 29 ft lbs for the the M10 bolts on the brackets.





STEP 16



Install the alternator using (2) M10 x 90mm bolts and (2) 3/4" x .675" spacers between the head plate and alternator

Torque the M8 blots to 19 ft lbs

M10 bolts to 29 ft lbs





STEP 17

Install both supercharger head units using (7) 3/8 x 1.25" bolts and washers

Torque to 29 ft lbs

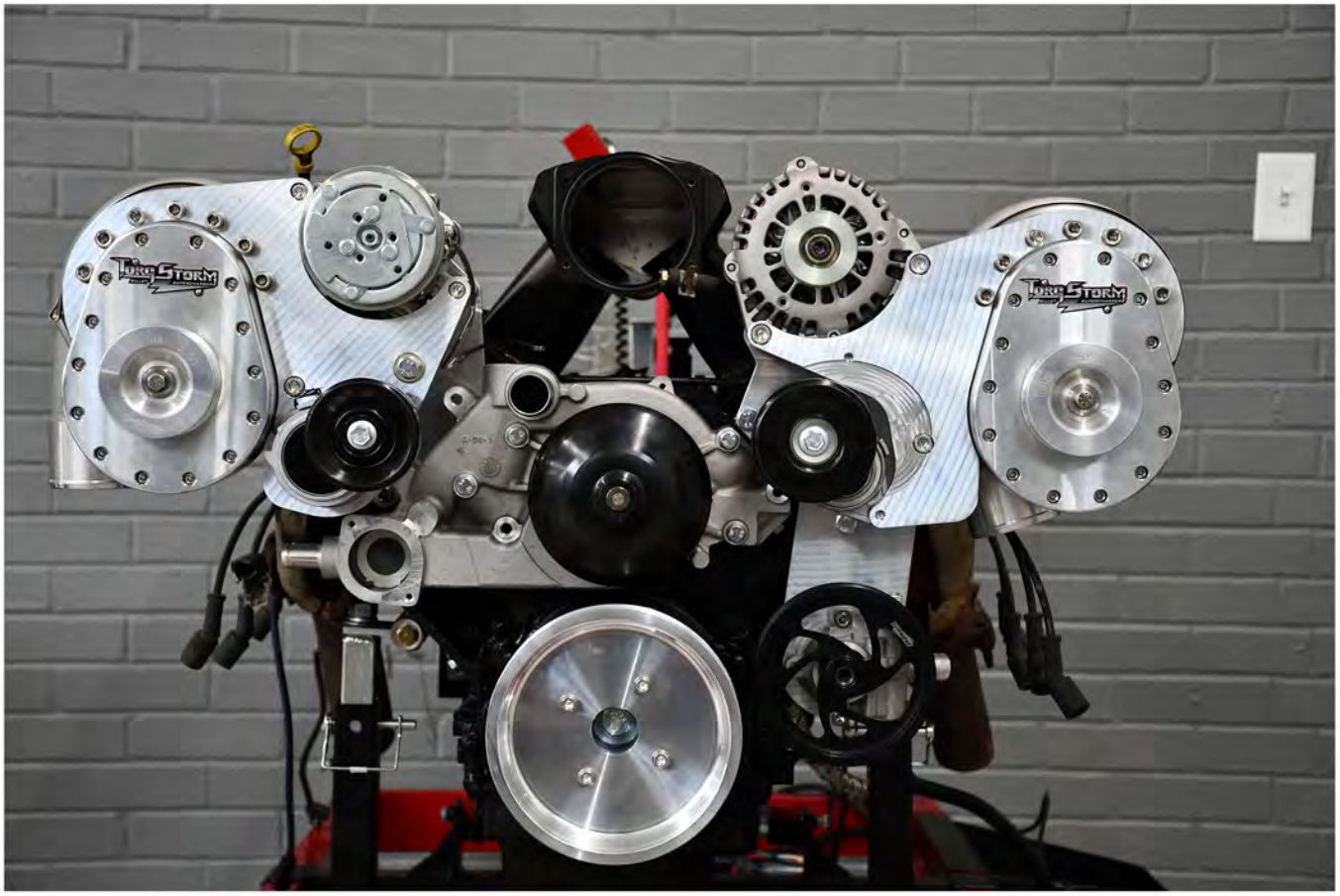

STEP 18

Install the accessory and supercharger belts as pictured.

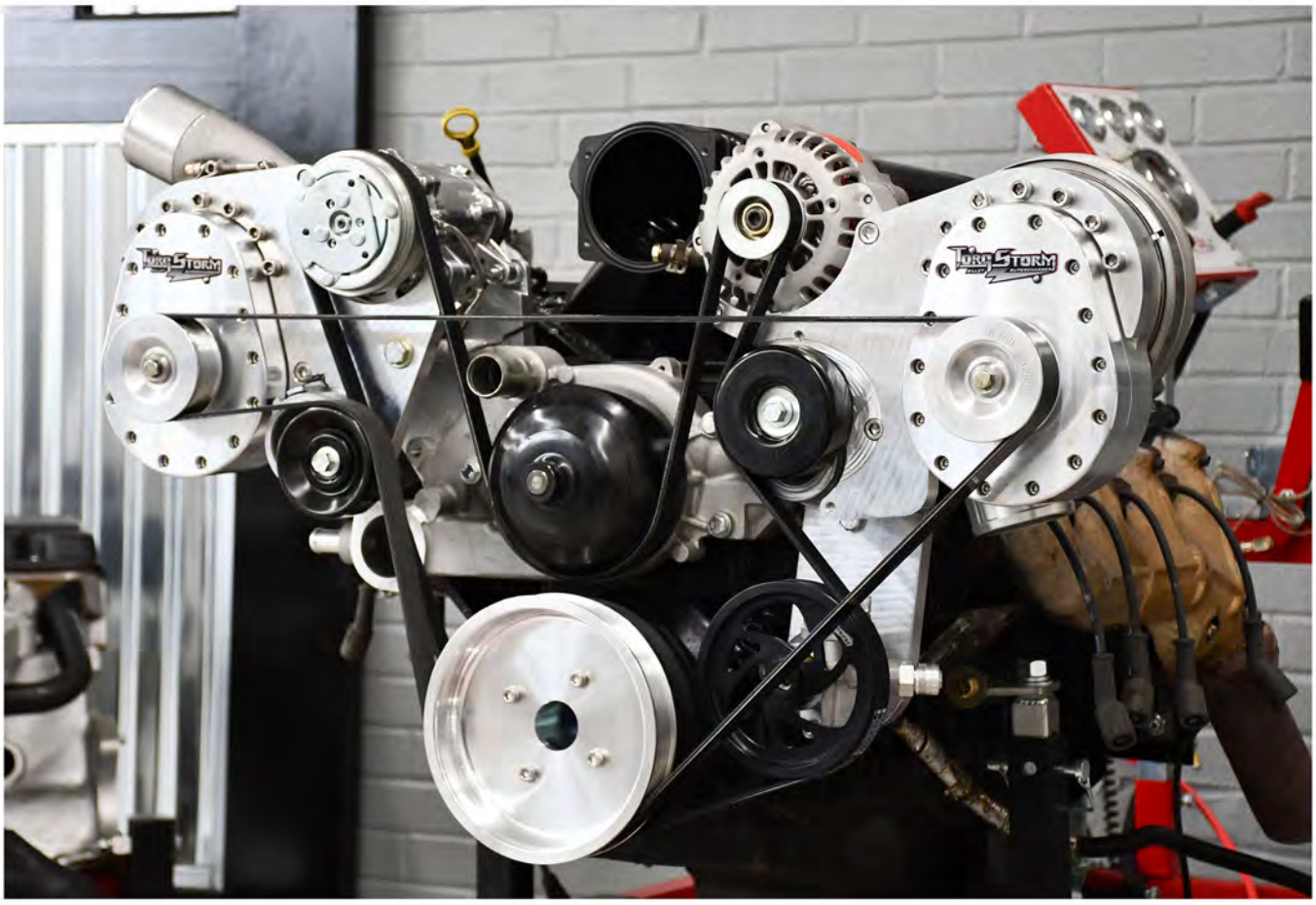

STEP 19

Install the air filters on the superchargers with the supplied 3.5" clamps.





Important information

Plumb the supercharger outlet according to your vehicle, you may have to adjust the supercharger scroll for proper alignment to supercharger. Note: Do not over tighten V-band clamp on scroll. Tighten clamp just until scroll cannot be rotated. Approx. 1/8"-1/4" threads showing past nut on clamp.

Hook up both ARP-BOV-TORQ 52 BOV with ARP-TEMP-BUNG1 aluminum weld in bung in between the supercharger and throttle body. Hook up to vacuum source off of the intake with supplied vacuum line. Cut to length.



- *Replace all spark plugs with one or two heat ranges cooler.*
- *Fuel/ Ignition managment system must be tuned when installing Torqstorm Supercharger.*
- *Reconnect battery*
- *Double check all fittings, bolts, clamps. Make sure all wires and lines are properly secured with clamps or wire ties .*
- *Make sure fuel tank is filled with 91 octane or higher fuel.*
- *Start engine and allow to idle a few minutes then shut down.*
- *Recheck to be sure that no hoses, wires, ect are near the exhaust, headers, or supercharger components.*
- *Recheck tune before commencing test drive.*
- *After test drive examine all bolts, belts and check for leaks or running issues before finishing with the vehicle.*
- *Oil must be changed every 10k miles or once a year, whichever comes first.*
- *Order oil direct from TorqStorm. Part number ARP-OIL-MTL*
- *Your TorqStorm Supercharger will have a 1 year limited warranty from the date on your paid invoice.*

Additional information for Boost

- It is suggested to run a wideband o2 sensor to monitor correct air/fuel ratio. 11.5 is ideal for 91 octane or higher pump gas.

- PLEASE TAKE SPECIAL NOTE: Operating the vehicle without all the sub assemblies completed and properly installed and working may cause FAILURE OF MAJOR ENGINE COMPONENTS.

- If you have any questions or concerns contact us at sales@torqstorm.com

- Torqstorm superchargers come from the factory filled with 6 oz of ARP-OIL-MTL

-Supercharger is ready to run

HEAD BRACKET LAYOUT

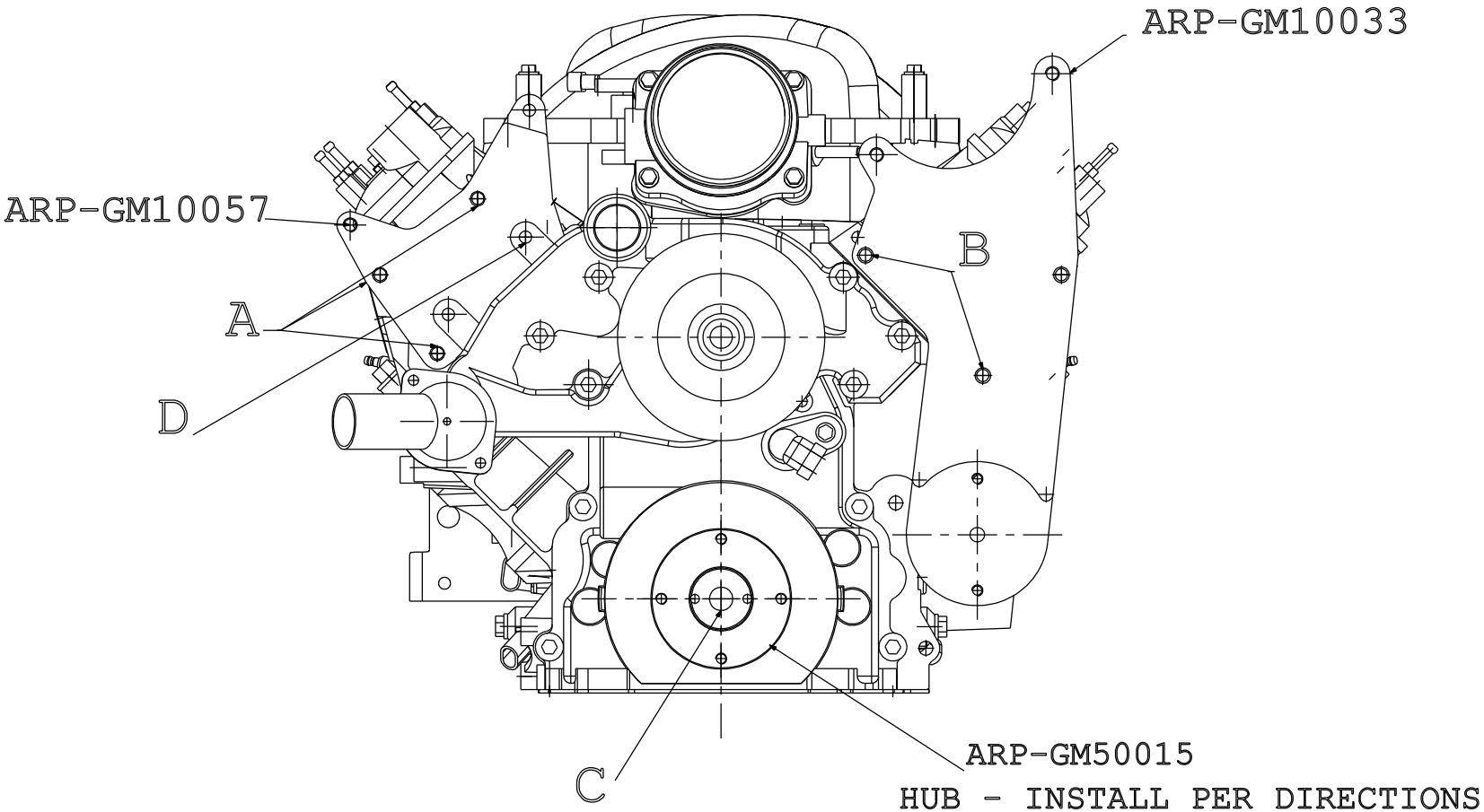

A = 3 @ M10 x 1.5 x 35mm SS HHB
B = 2 @ M10 x 1.5 x 35mm SS HHB
C = 1 @ ARP-GM50029 CRANK BOLT
D = 1 @ M10 x 1.5 x 30mm SS HHB
A-B-D = USE AN WASHERS

Description
TWIN HEAD BRACKET LAYOUT

Part #
ARP-K-GM-LS-1006

TORQSTORM® BILLET SUPERCHARGERS

30/07/2018

SUPERCHARGER BRACKET LAYOUT

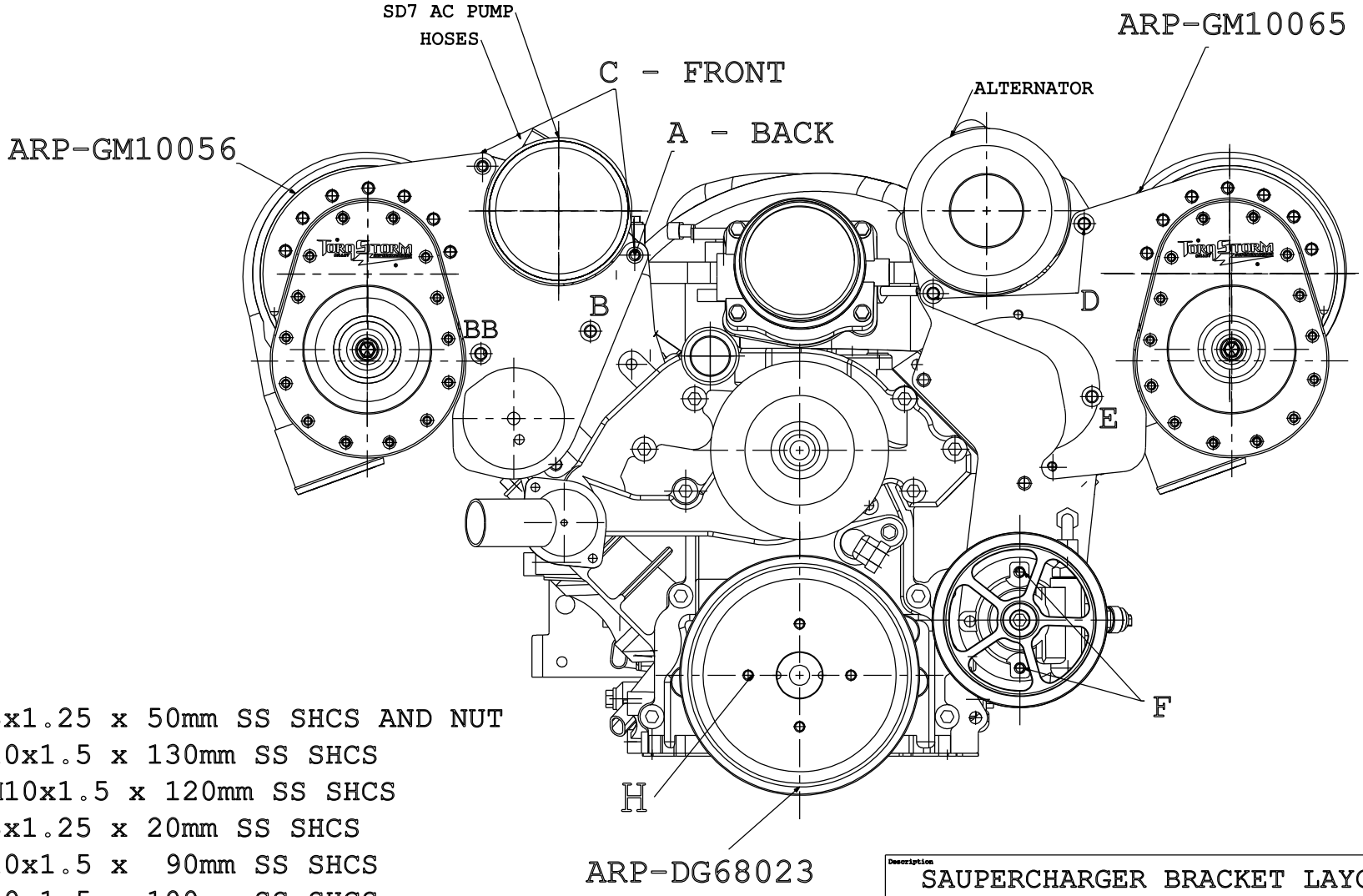

A = 1 @ M8x1.25 x 50mm SS SHCS AND NUT
B = 1 @ M10x1.5 x 130mm SS SHCS
BB = 1 @ M10x1.5 x 120mm SS SHCS
C = 2 @ M8x1.25 x 20mm SS SHCS
D = 2 @ M10x1.5 x 90mm SS SHCS
E = 1 @ M10x1.5 x 100mm SS SHCS
F = 2 @ 5/16-18 x 2-3/4 SS SHCS
G = 14 @ 3/8-16 x 1-1/4 SS SHCS
H = 4 @ 5/16-24 x 3/4 SS SHCS
H = 4 5/16 SS AN WASHERS

31/07/2018

Description
SAUPERCHARGER BRACKET LAYOUT

Part #
ARP-K-GM-LS-1006

TORQSTORM® BILLET SUPERCHARGERS

BELT ROUTING DIAGRAM

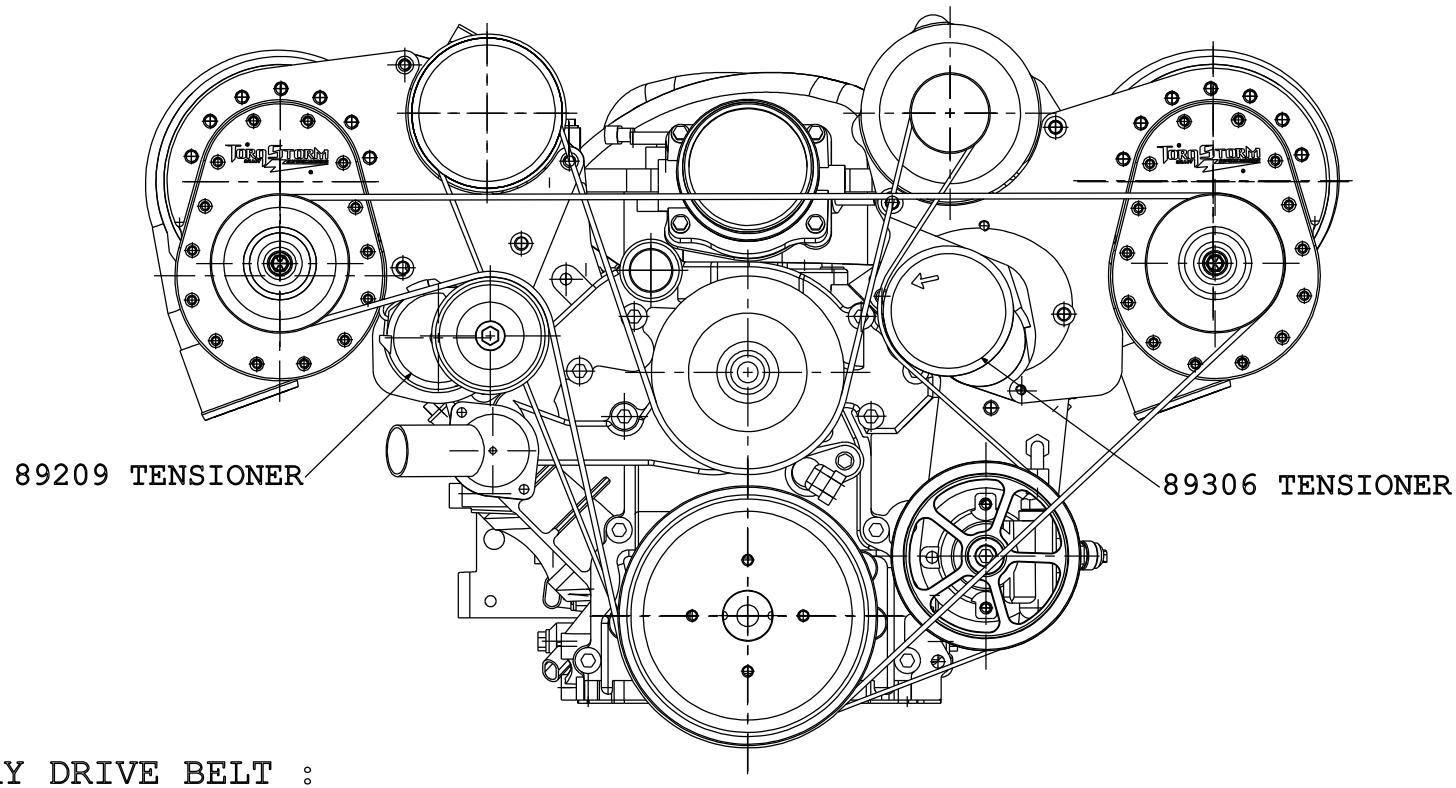

ACCESSORY DRIVE BELT :

GATES K060858
DAYCO 5060858

SUPERCHARGER DRIVE BELT :

3.100 PULLEY = GATES K080806
DAYCO 5080805

3.250 PULLEY = GATES K080810
DAYCO 5080810

3.500 PULLEY = GATES K080816
DAYCO 5080815

4.000 PULLEY = GATES K080830
DAYCO 5080830

Description
TWIN WITH ACC BELT ROUTING

Part #
ARP-K-GM-LS-1006

TORQSTORM® BILLET SUPERCHARGERS

27/11/2017

KIT DIMENSIONS

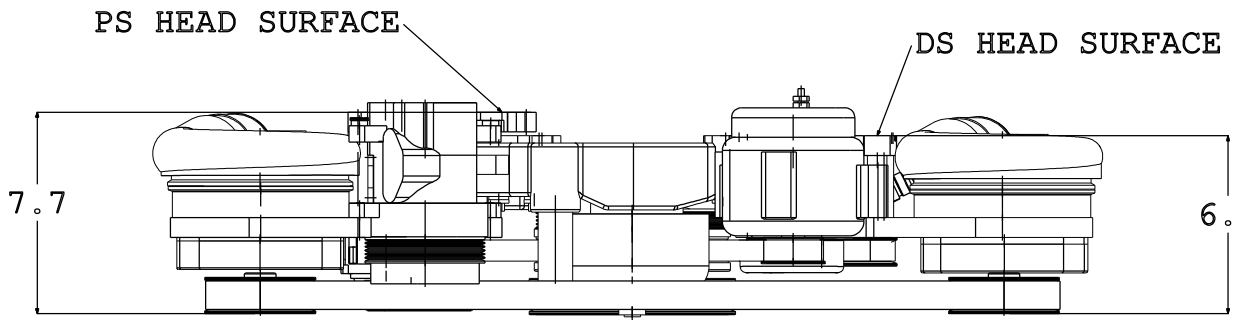

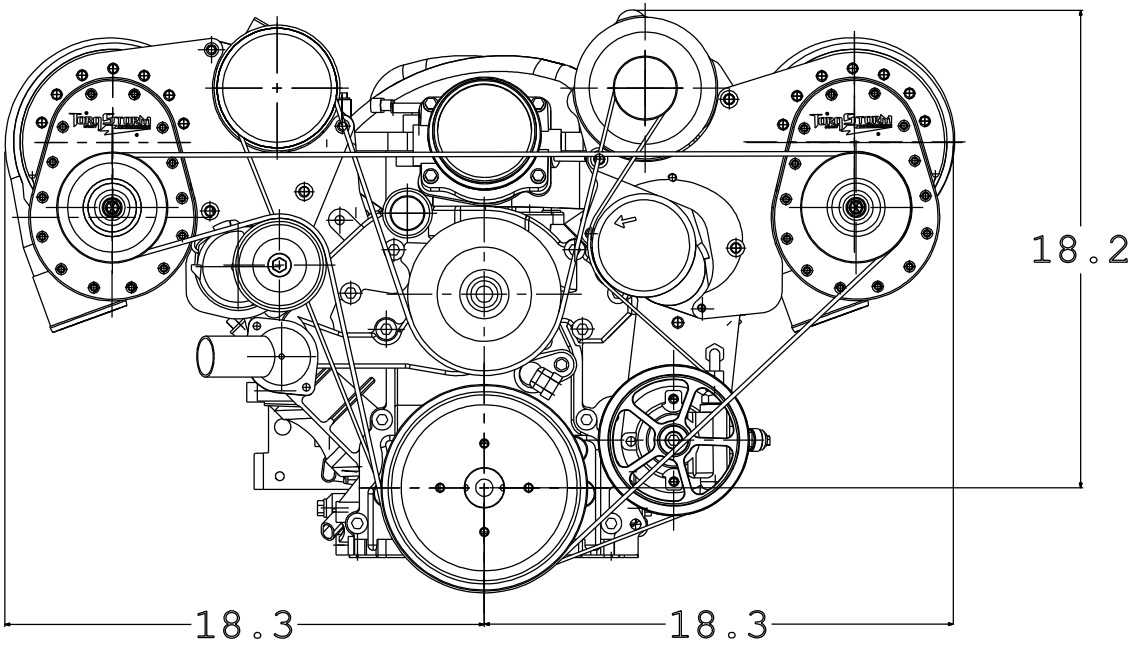

Description	DIMENSIONS
Part #	ARP-K-GM-LS1006

TORQSTORM® BILLET SUPERCHARGERS

31/07/2018

SPACER LOCATIONS

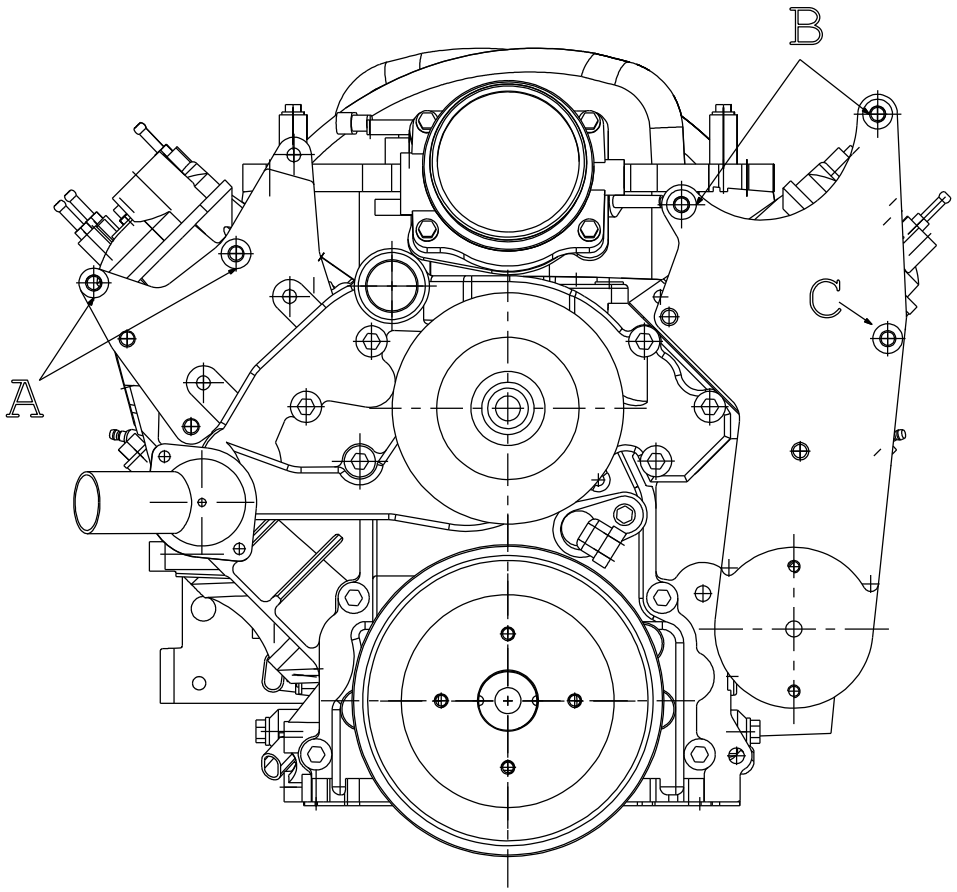

A = 2 @ ARP-S-750-3250 IN BETWEEN BRACKETS
B = 2 @ ARP-S-750-0350 IN FRONT OF HEAD BRACKET
C = 1 @ ARP-S-750-2350 IN BETWEEN BRACKETS

Description
TWIN SPACER LAYOUT

Part #
ARP-K-GM-LS-1006

TORQSTORM® BILLET SUPERCHARGERS

30/07/2018

Oil Change Instructions

OIL CHANGE MUST BE PERFORMED EVERY 10,000 MILES OR ONCE A YEAR, WHICHEVER COMES FIRST.

FAILURE TO DO SO WILL VOID YOUR WARRANTY.



YOU CAN PURCHASE OIL

FROM US DIRECTLY AT

TORQSTORM.COM

PART # ARP-OIL-MTL



STEP 1

Remove your supercharger from your car and flip over to backside to access the drain plug.

STEP 2

Remove drain plug with a 1/4" allen and drain oil.

STEP 3

Pour in your Torqstorm specific oil, 6oz into the same hole you drained from.



STEP 4

Replace the drain plug.

Torque to 15 ft lbs



STEP 5

Re-install the supercharger on your vehicle.

Take note of the mileage on your odometer.

Instructions
BOV MAINTENANCE

In many cases your vehicle is exposed to harsh weather and road debris. Regular maintenance is important in order for your mechanical pieces to function properly. BOV inspection every oil change interval.

STEP 1

You can leave the body of the BOV attached to your plumbing as long as your able to remove the lid from your BOV. Remove the lid, counter clockwise, there is a strong spring beneath it.



STEP 2

Remove the spring and brass piston. Clean and inspect the piston and spring for any abnormal wear or defects.



STEP 3

Using Silicone paste apply a modest amount inside the body of the BOV.



STEP 4

Install the brass piston into the body of the BOV, checking to make sure it goes in and out smoothly.



STEP 5

Install the spring into the piston, making sure it is seated flat in the "Cup"



STEP 6

Install the BOV cap. Make sure the spring is seated properly. Be careful not to cross thread it. A little wd-40 on the threads will help it to assemble easier.



STEP 7

Attach your vacuum line and check operation.



Accelerated Racing Products, LLC

Billet Supercharger Limited 1-Year Warranty

Accelerated Racing Products, LLC ("we," "our" or "us") warrants only to the original consumer purchaser ("you" or "your") that your new Billet Supercharger head unit (referred to herein as your "supercharger") shall be free of defects in workmanship and materials for 1 year, from the date of purchase. This Limited 1-Year Warranty (this "Limited Warranty") does not extend to any subsequent owner or other transferee of your supercharger and shall terminate upon any transfer of your supercharger. This Limited Warranty is effective for superchargers purchased on or after 1/01/2023.

Our authorization must be obtained before you return the supercharger for warranty inspection. Superchargers that we authorize to be inspected must be shipped freight prepaid, at your expense. Additional warranty procedures are set forth below.

Subject to the other limitations set forth in this Limited Warranty, we will, in our sole discretion, either repair or replace the supercharger or portion thereof subject to warranty free of charge. No refunds or credits will be allowed.

Superchargers will not qualify for warranty if (i) the supercharger pulley or impeller has been removed or changed, (ii) the pulley or impeller warranty seal has been broken or tampered with and/or (iii) the kit parts have been altered or improperly installed.

Further, this Limited Warranty does not cover any defects or damage due to: (i) transportation; (ii) storage; (iii) improper installation or use; (iii) failure to follow the product instructions; (iv) alterations or modifications without our prior written consent; (v) use of a component or accessory not approved by us; (vi) unauthorized repair; (vii) normal wear and tear; or (viii) external causes such as accidents, abuse, misuse or other actions or events beyond our reasonable control.

Superchargers that we repair or replace will be returned to you with ground transportation charges prepaid by us, within the continental United States, or to the point of embarkation within the continental United States, via UPS ground (or similar) service. You will be responsible for any charges associated with expedited delivery or freight charges outside the continental United States.

Superchargers authorized to be returned and inspected but which do not qualify for warranty, and which are not repaired at your expense, will be subject to a US$100.00 inspection fee and returned to you, at your expense.

Warranty Procedure

Go to the website and fill out the Warranty/Repair form at: https://torqstorm.com/warranty-repair-form/

1. Serial number of the supercharger.
2. Description of the problem.
3. Make, Model, and Year of the vehicle.
4. Your name, shipping address (No PO Boxes allowed), and your daytime telephone number.
5. A copy of your original purchase invoice.
6. A clear picture of supercharger mounted in the vehicle.

Upon receipt of the above, if warranty service is appropriate, an Accelerated Racing Products Return Authorization Number will be assigned. You should then send the supercharger or other defective part, with all of the above information to:

Accelerated Racing Products LLC
2909 Buchanan Ave SW
Wyoming, MI 49548

The return authorization number must be included on the package. Freight collect shipments will be refused and returned to the sender at the sender's expense.

Disclaimers

THIS LIMITED WARRANTY GIVES YOU SPECIFIC LEGAL RIGHTS AND YOU MAY ALSO HAVE OTHER RIGHTS, WHICH VARY FROM STATE TO STATE.

WE HEREBY LIMIT THE DURATION AND REMEDIES OF ALL IMPLIED WARRANTIES, INCLUDING WITHOUT LIMITATION THE WARRANTIES OF MERCHANTABILITY AND FITNESS FOR A PARTICULAR PURPOSE, TO ONE YEAR.

SOME STATES DO NOT ALLOW LIMITATIONS ON HOW LONG AN IMPLIED WARRANTY LASTS, SO THE ABOVE LIMITATION MAY NOT APPLY TO YOU.

OUR RESPONSIBILITY FOR DEFECTIVE SUPERCHARGERS IS LIMITED TO REPAIR OR REPLACEMENT AS DESCRIBED ABOVE IN THIS LIMITED WARRANTY.

Limitation of Liability

THE REMEDIES DESCRIBED ABOVE ARE YOUR SOLE AND EXCLUSIVE REMEDIES AND OUR ENTIRE LIABILITY FOR ANY BREACH OF THIS LIMITED WARRANTY. OUR LIABILITY SHALL UNDER NO CIRCUMSTANCES EXCEED THE ACTUAL AMOUNT PAID BY YOU FOR THE DEFECTIVE SUPERCHARGER, NOR SHALL WE UNDER ANY CIRCUMSTANCES BE LIABLE FOR ANY CONSEQUENTIAL, INCIDENTAL, SPECIAL OR PUNITIVE DAMAGES OR LOSSES, WHETHER DIRECT OR INDIRECT (INCLUDING, WITHOUT LIMITATION, ENGINE DAMAGE).

SOME STATES DO NOT ALLOW THE EXCLUSION OR LIMITATION OF INCIDENTAL OR CONSEQUENTIAL DAMAGES, SO THE ABOVE LIMITATION OR EXCLUSION MAY NOT APPLY TO YOU.