ARP-K-GM-SBC-2XR *SMALL BLOCK CHEVY TWIN*

INSTALLATION GUIDE



QUALITY AMERICAN MADE SUPERCHARGERS

TORQ STORM® BILLET SUPERCHARGERS

STEP 1

This kit requires a standard rotation short water pump.

STEP 2

Mount the supercharger head

bracket ARP-GM10012

(drivers side) with

(3) 3/8-16 x 1.0 bolt.

Torque to 29 ft. lbs.



STEP 3

Mount ARP-GM10019 bracket to head (passenger side) using (1) 3/8-16 x 1.0 (quantity depends on heads used)

Torque to 27 ft lbs



STEP 4

Install Crank pulley ARP-GM68046 with (3) 3/8-24 x 1.00 bolts and AN washers.

Torque to 27 ft lbs

Also install (1) 7/16-20 x 2.00" bolt and ARP-GM50024 washer into crank. Apply blue loctite.

Torque to 55 ft lbs



STEP 5

Install the supercharger bracket with (4) ARP-S-75-2575 spacers between the bracket and head plate. (passenger side).

Use (4) 3/8-16 x 3.5" bolts.

Tensioner must be removed to mount.

Torque to 29 ft lbs

Re-install tensioner



STEP 6

Install the supercharger bracket with (4) ARP-S-75-3250 spacers between the bracket and head plate. (drivers side).

Use (4) 3/8-16 x 4.25" bolts.

Tensioner must be removed to mount.

Torque to 29 ft lbs

Re-install tensioner

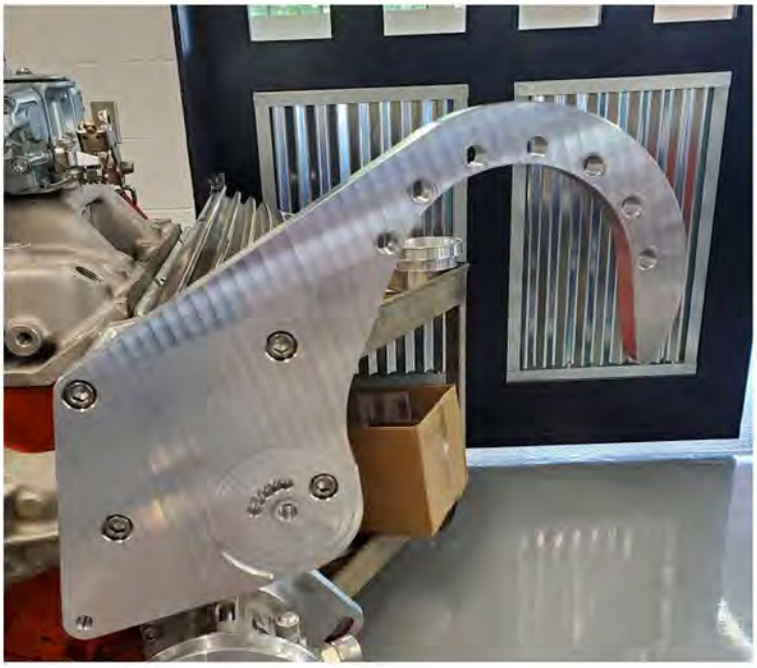

STEP 7

Install the superchargers to each bracket using (7) 3/8-16 x 1.25" bolts and washers.

Torque to 29 ft lbs



STEP 8

Install your accessory belt

STEP 9

Install each supercharger belt as shown.

Refer to layout sheet for belt sizes.





STEP 10

Install the air filter onto each supercharger

STEP 11

Install the carb hat of your choice. (Not included in twin kits)

Make sure the o-ring is also in the nut and everthing is seated properly.

The twin kits do not include plumbing to your carb or TB injection. For this we suggest sourcing 3" piping and couplers/ clamps online and fitting them per your specific vehicle.



STEP 12

Hook up BOV to manifold vacuum source using supplied 7/32 hose.

- *Replace all spark plugs with one or two heat ranges cooler.*
- *Fuel/ Ignition managment system must be tuned when installing Torqstorm Supercharger.*
- *Reconnect battery*
- *Double check all fittings, bolts, clamps. Make sure all wires and lines are properly secured with clamps or wire ties .*
- *Make sure fuel tank is filled with 91 octane or higher fuel.*
- *Start engine and allow to idle a few minutes then shut down.*
- *Recheck to be sure that no hoses, wires, ect are near the exhaust, headers, or supercharger components.*
- *Recheck tune before commencing test drive.*
- *After test drive examine all bolts, belts and check for leaks or running issues before finishing with the vehicle.*

-- *Oil must be changed every 10k miles or once a year, whichever comes first.*

- *Order oil direct from TorqStorm. Part number ARP-OIL-MTL*
- *Your TorqStorm Supercharger will have a 1 year limited warranty from the date on your paid invoice.*

Additional information for Boost

- It is suggested to run a wideband o2 sensor to monitor correct air/fuel ratio. 11.5 is ideal for 91 octane or higher pump gas.

- PLEASE TAKE SPECIAL NOTE: Operating the vehicle without all the sub assemblies completed and properly installed and working may cause FAILURE OF MAJOR ENGINE COMPONENTS.

- If you have any questions or concerns contact us at sales@torqstorm.com

- Torqstorm superchargers come from the factory filled with 6 oz of ARP-OIL-MTL

- Supercharger is ready to run

BELT ROUTING

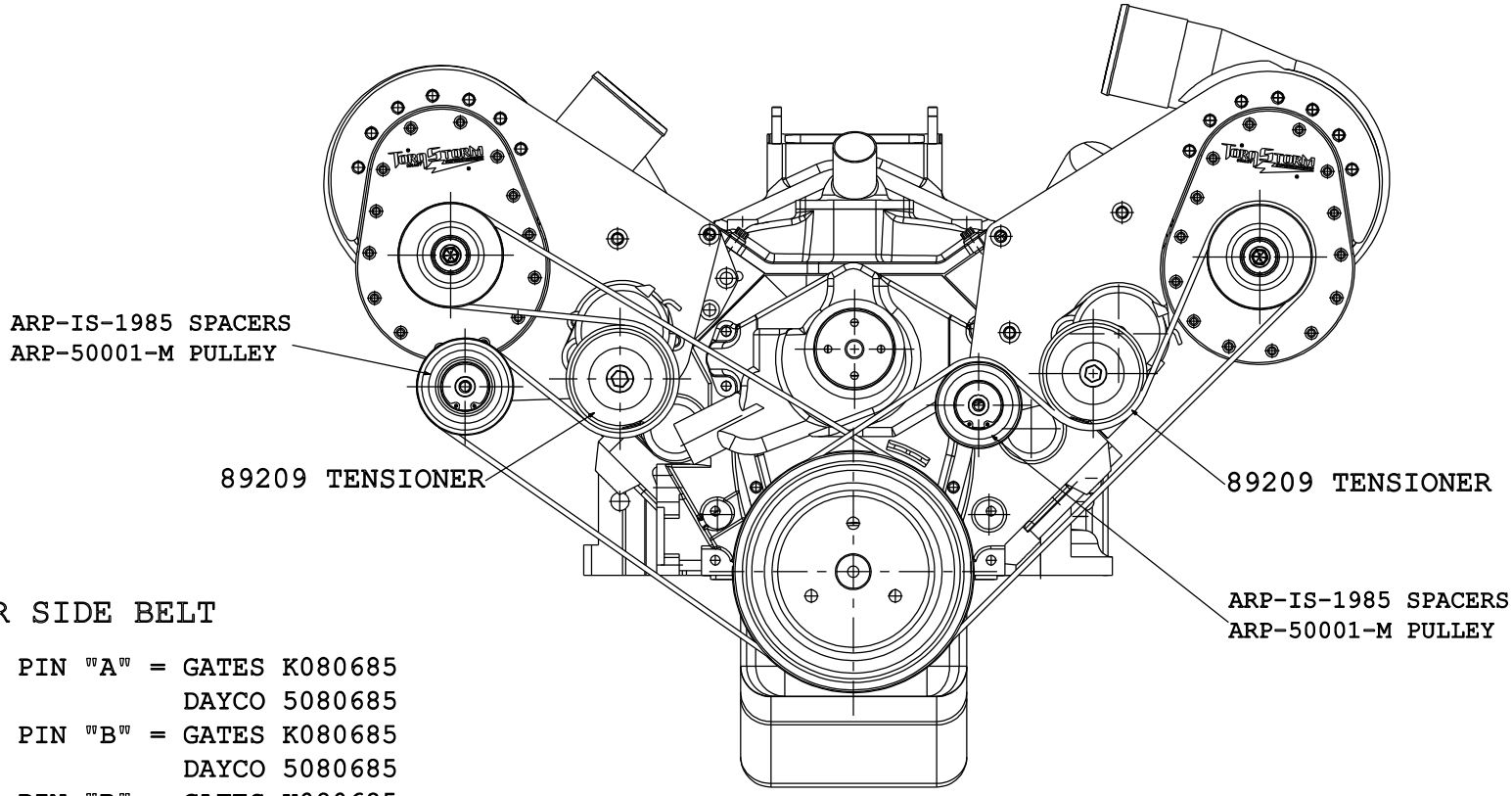

PASSENGER SIDE BELT

3.100" PULLEY USES PIN "A" = GATES K080685
DAYCO 5080685
3-1/4" PULLEY USES PIN "B" = GATES K080685
DAYCO 5080685
3-1/2" PULLEY USES PIN "B" = GATES K080685
DAYCO 5080685
4.000" PULLEY USES PIN "C" = GATES K080690
DAYCO 5080690

DRIVERS SIDE BELT

3.100" PULLEY USES PIN "A" = GATES K080530
DAYCO 5080530
3-1/4" PULLEY USES PIN "A" = GATES K080530
DAYCO 5080530
3-1/2" PULLEY USES PIN "A" = GATES K080537
DAYCO 5080537
4.000" PULLEY USES PIN "B" = GATES K080537
DAYCO 5080537

Description
BELT ROUTING

Part #
ARP-K-GM-SBC-2XR

TORQSTORM® BILLET SUPERCHARGERS

02/04/2019

KIT DIMENSIONS
FRONT

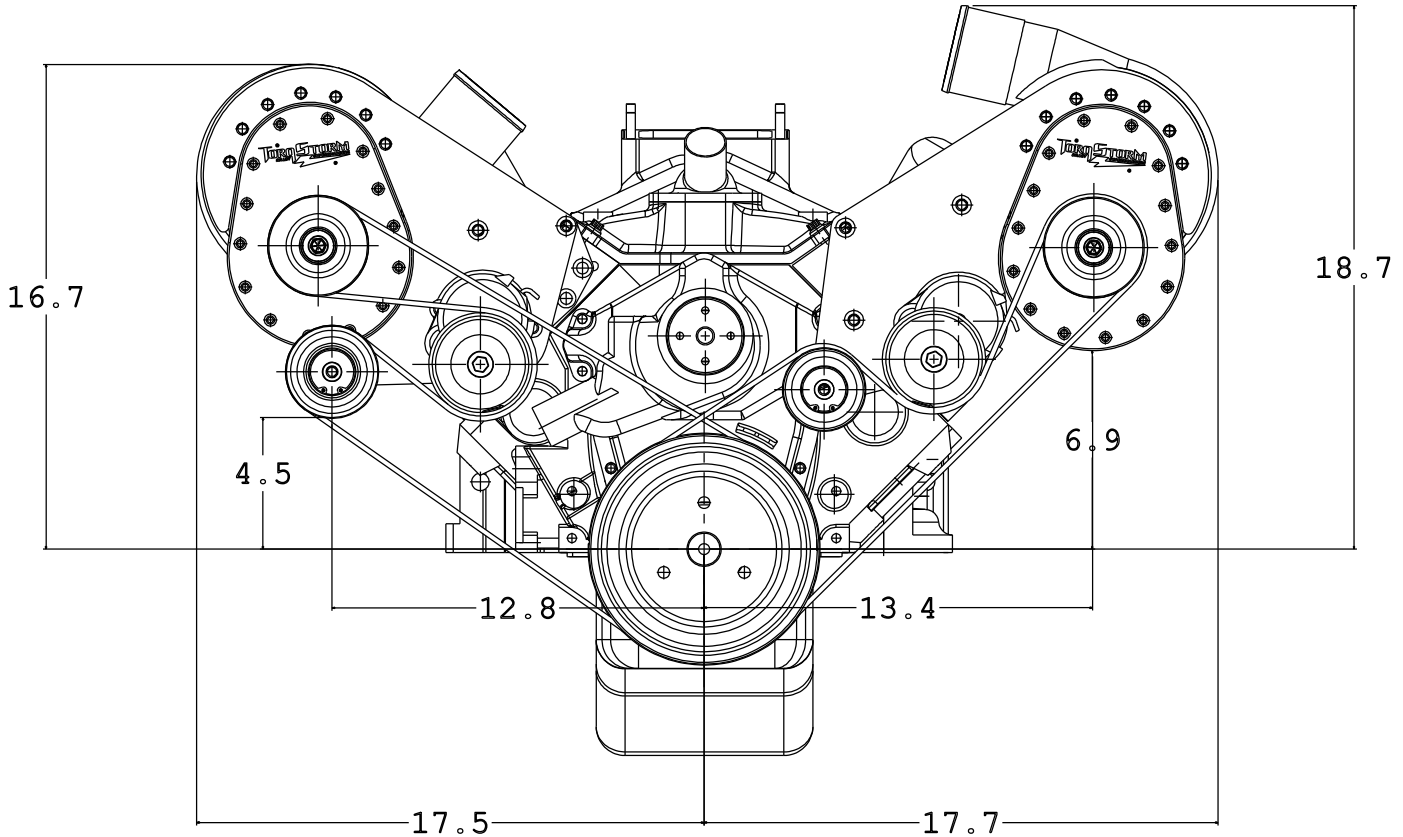

Description
FRONT KIT DIMENSIONS

Part #
ARP-K-GM-SBC-2XR

TORQSTORM BILLET SUPERCHARGERS

09/09/2019

HEAD BRACKET LAYOUT

BOLT LOCATIONS FOR
AFTER MARKET HEADS
DART, AFR, & TRICK FLOW

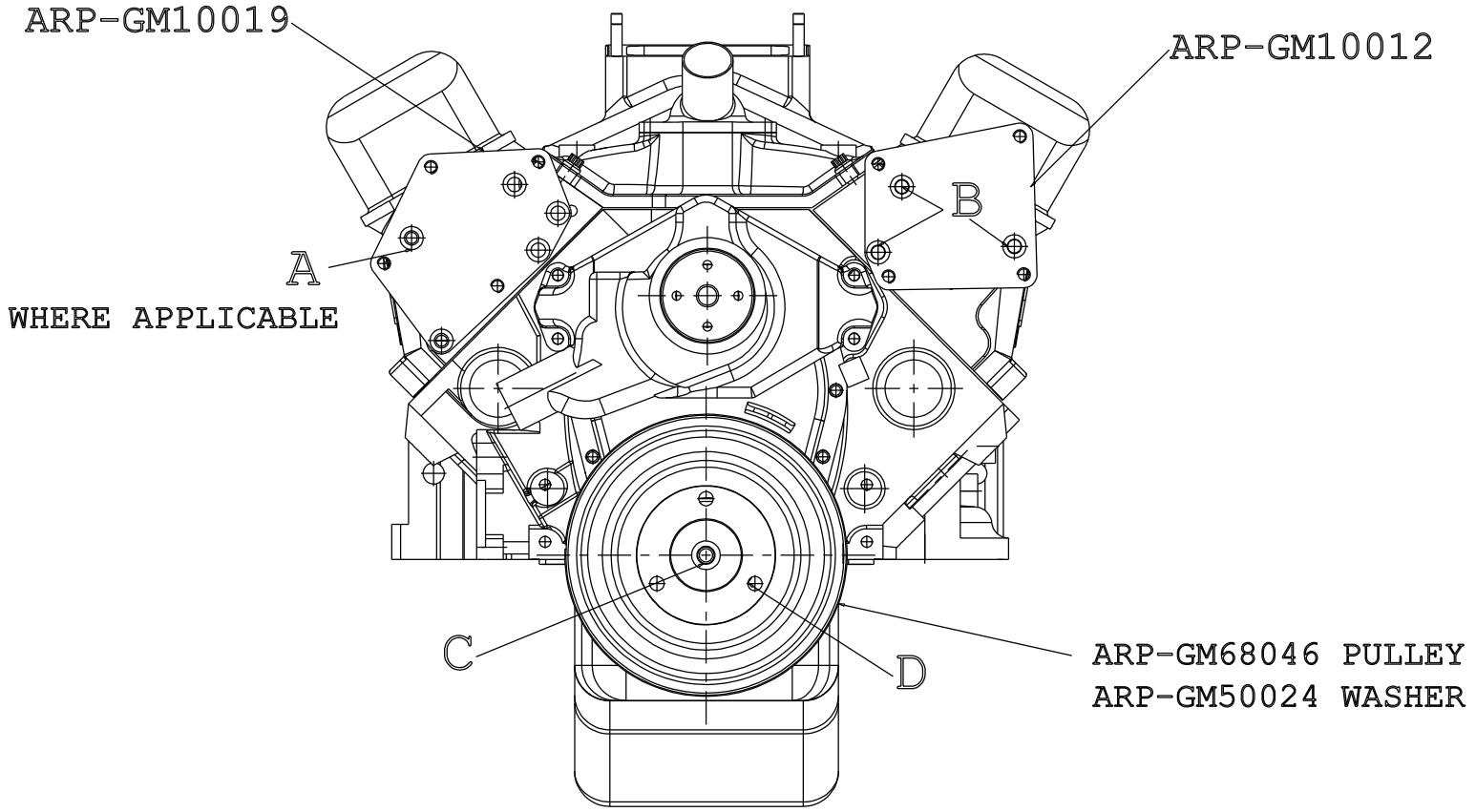

A = 3 @ 3/8-16 x 1.0 SS SHCS
B = 3 @ 3/8-16 x 1.0 SS SHCS
C = 1 @ 7/16-20 x 3.0 SS HHB
C = 1 @ ARP-GM50024 WASHER
D = 3 @ 3/8-24 x 1.0 SS SHCS

Description
HEAD BRACKET LAYOUT

Part #
ARP-K-GM-SBC-2XR

TORQSTORM® BILLET SUPERCHARGERS

05/05/2020

SUPERCHARGER BRACKET LAYOUT

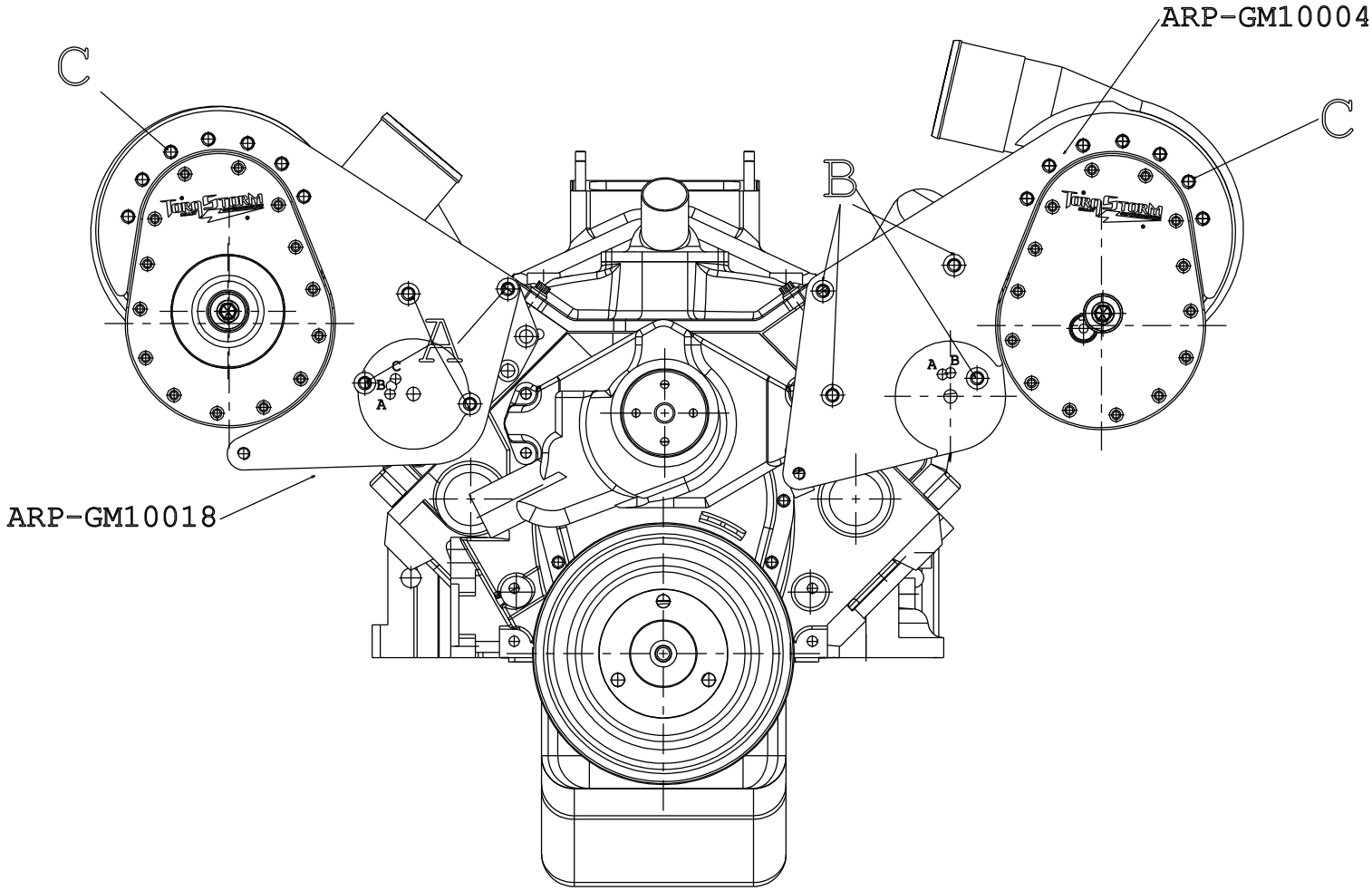

A = 4 @ 3/8-16 x 3-1/2 SS SHCS
A = 4 @ ARP-S-75-2575 SPACERS
B = 4 @ 3/8-16 x 4-1/4 SS SHCS
B = 4 @ ARP-S-75-3250 SPACERS
C = 14 @ 3/8-16 x 1-1/4 SS SHCS

Description
SUPERCHARGERS BRACKET LAYOUT

Part #
ARP-K-GM-SBC-2XR

TORQSTORM® BILLET SUPERCHARGERS

02/04/2019

KIT DIMENSIONS

TOP

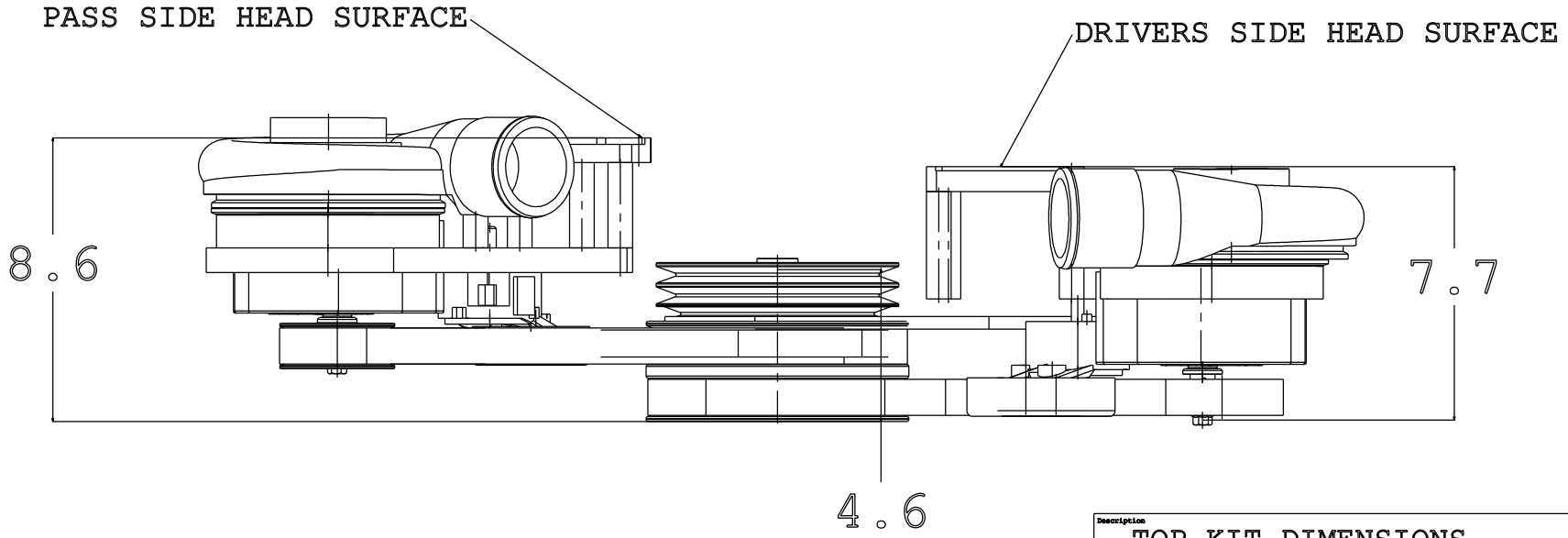

Description	TOP KIT DIMENSIONS
Part #	ARP-K-GM-SBC-2XR

TORQSTORM® BILLET SUPERCHARGERS

09/09/2019

Oil Change Instructions

OIL CHANGE MUST BE PERFORMED EVERY 10,000 MILES OR ONCE A YEAR, WHICHEVER COMES FIRST.

FAILURE TO DO SO WILL VOID YOUR WARRANTY.



YOU CAN PURCHASE OIL

FROM US DIRECTLY AT

TORQSTORM.COM

PART # ARP-OIL-MTL



STEP 1

Remove your supercharger from your car and flip over to backside to access the drain plug.

STEP 2

Remove drain plug with a 1/4" allen and drain oil.

STEP 3

Pour in your Torqstorm specific oil, 6oz into the same hole you drained from.



STEP 4

Replace the drain plug.

Torque to 15 ft lbs



STEP 5

Re-install the supercharger on your vehicle.

Take note of the mileage on your odometer.

Instructions
BOV MAINTENANCE

In many cases your vehicle is exposed to harsh weather and road debris. Regular maintenance is important in order for your mechanical pieces to function properly. BOV inspection every oil change interval.

STEP 1

You can leave the body of the BOV attached to your plumbing as long as your able to remove the lid from your BOV. Remove the lid, counter clockwise, there is a strong spring beneath it.



STEP 2

Remove the spring and brass piston. Clean and inspect the piston and spring for any abnormal wear or defects.



STEP 3

Using Silicone paste apply a modest amount inside the body of the BOV.



STEP 4

Install the brass piston into the body of the BOV, checking to make sure it goes in and out smoothly.



STEP 5

Install the spring into the piston, making sure it is seated flat in the "Cup"



STEP 6

Install the BOV cap. Make sure the spring is seated properly. Be careful not to cross thread it. A little wd-40 on the threads will help it to assemble easier.



STEP 7

Attach your vacuum line and check operation.



Accelerated Racing Products, LLC

Billet Supercharger Limited 1-Year Warranty

Accelerated Racing Products, LLC ("we," "our" or "us") warrants only to the original consumer purchaser ("you" or "your") that your new Billet Supercharger head unit (referred to herein as your "supercharger") shall be free of defects in workmanship and materials for 1 year, from the date of purchase. This Limited 1-Year Warranty (this "Limited Warranty") does not extend to any subsequent owner or other transferee of your supercharger and shall terminate upon any transfer of your supercharger. This Limited Warranty is effective for superchargers purchased on or after 1/01/2023.

Our authorization must be obtained before you return the supercharger for warranty inspection. Superchargers that we authorize to be inspected must be shipped freight prepaid, at your expense. Additional warranty procedures are set forth below.

Subject to the other limitations set forth in this Limited Warranty, we will, in our sole discretion, either repair or replace the supercharger or portion thereof subject to warranty free of charge. No refunds or credits will be allowed.

Superchargers will not qualify for warranty if (i) the supercharger pulley or impeller has been removed or changed, (ii) the pulley or impeller warranty seal has been broken or tampered with and/or (iii) the kit parts have been altered or improperly installed.

Further, this Limited Warranty does not cover any defects or damage due to: (i) transportation; (ii) storage; (iii) improper installation or use; (iii) failure to follow the product instructions; (iv) alterations or modifications without our prior written consent; (v) use of a component or accessory not approved by us; (vi) unauthorized repair; (vii) normal wear and tear; or (viii) external causes such as accidents, abuse, misuse or other actions or events beyond our reasonable control.

Superchargers that we repair or replace will be returned to you with ground transportation charges prepaid by us, within the continental United States, or to the point of embarkation within the continental United States, via UPS ground (or similar) service. You will be responsible for any charges associated with expedited delivery or freight charges outside the continental United States.

Superchargers authorized to be returned and inspected but which do not qualify for warranty, and which are not repaired at your expense, will be subject to a US$100.00 inspection fee and returned to you, at your expense.

Warranty Procedure

Go to the website and fill out the Warranty/Repair form at: https://torqstorm.com/warranty-repair-form/

1. Serial number of the supercharger.
2. Description of the problem.
3. Make, Model, and Year of the vehicle.
4. Your name, shipping address (No PO Boxes allowed), and your daytime telephone number.
5. A copy of your original purchase invoice.
6. A clear picture of supercharger mounted in the vehicle.

Upon receipt of the above, if warranty service is appropriate, an Accelerated Racing Products Return Authorization Number will be assigned. You should then send the supercharger or other defective part, with all of the above information to:

Accelerated Racing Products LLC
2909 Buchanan Ave SW
Wyoming, MI 49548

The return authorization number must be included on the package. Freight collect shipments will be refused and returned to the sender at the sender's expense.

Disclaimers

THIS LIMITED WARRANTY GIVES YOU SPECIFIC LEGAL RIGHTS AND YOU MAY ALSO HAVE OTHER RIGHTS, WHICH VARY FROM STATE TO STATE.

WE HEREBY LIMIT THE DURATION AND REMEDIES OF ALL IMPLIED WARRANTIES, INCLUDING WITHOUT LIMITATION THE WARRANTIES OF MERCHANTABILITY AND FITNESS FOR A PARTICULAR PURPOSE, TO ONE YEAR.

SOME STATES DO NOT ALLOW LIMITATIONS ON HOW LONG AN IMPLIED WARRANTY LASTS, SO THE ABOVE LIMITATION MAY NOT APPLY TO YOU.

OUR RESPONSIBILITY FOR DEFECTIVE SUPERCHARGERS IS LIMITED TO REPAIR OR REPLACEMENT AS DESCRIBED ABOVE IN THIS LIMITED WARRANTY.

Limitation of Liability

THE REMEDIES DESCRIBED ABOVE ARE YOUR SOLE AND EXCLUSIVE REMEDIES AND OUR ENTIRE LIABILITY FOR ANY BREACH OF THIS LIMITED WARRANTY. OUR LIABILITY SHALL UNDER NO CIRCUMSTANCES EXCEED THE ACTUAL AMOUNT PAID BY YOU FOR THE DEFECTIVE SUPERCHARGER, NOR SHALL WE UNDER ANY CIRCUMSTANCES BE LIABLE FOR ANY CONSEQUENTIAL, INCIDENTAL, SPECIAL OR PUNITIVE DAMAGES OR LOSSES, WHETHER DIRECT OR INDIRECT (INCLUDING, WITHOUT LIMITATION, ENGINE DAMAGE).

SOME STATES DO NOT ALLOW THE EXCLUSION OR LIMITATION OF INCIDENTAL OR CONSEQUENTIAL DAMAGES, SO THE ABOVE LIMITATION OR EXCLUSION MAY NOT APPLY TO YOU.