ARP-K-GM-SBC-2X *SMALL BLOCK CHEVY TWIN*

INSTALLATION GUIDE



QUALITY AMERICAN MADE SUPERCHARGERS

TorqStorm® BILLET SUPERCHARGERS

STEP 1

This kit requires a standard rotation water pump.

STEP 2

Mount the supercharger head bracket ARP-GM10045 (drivers side) with (1) 3/8-16 x 1.0 bolt. Making sure to line up other through hole.

Torque to 29 ft. lbs.

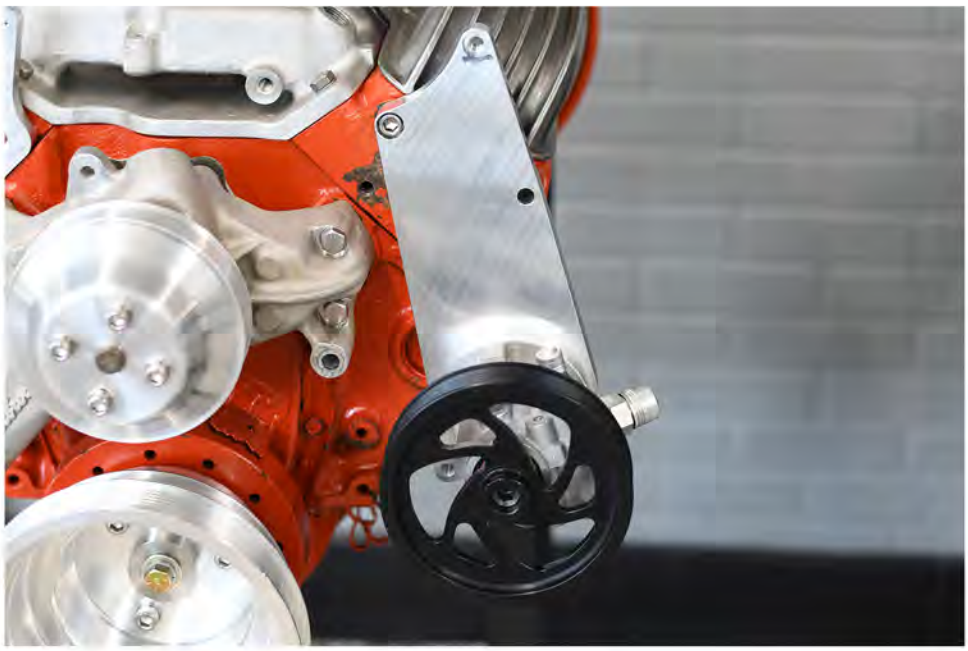

STEP 3

Install ARP-GM50038 spacer and power steering pump using 2 5/16 -18 x 3.75" bolts. Press on pulley so the snout area is flush with the shaft.

Torque to 17 ft lbs



STEP 4

Mount ARP-GM10069 bracket to head (passenger side) using (1) 3/8-16 x 1.0 (quantity depends on heads used)

Torque to 27 ft lbs

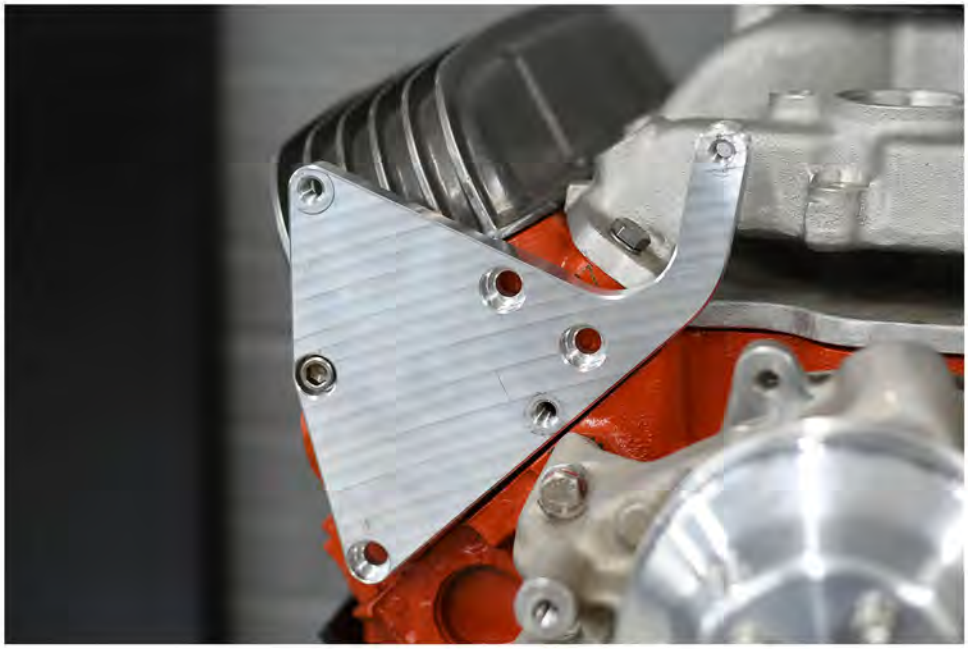

STEP 5

Install Crank pulley ARP-GM68017

with (3) 3/8-24 x 1.00 bolts and AN

washers.

Torque to 27 ft lbs

Also install (1) 7/16-20 x 2.00" bolt

and ARP-GM50024 washer into crank.

Apply blue loctite.

Torque to 55 ft lbs



STEP 6

(resort to layout sheet)

Install the supercharger bracket with (2) ARP-S-75-4125 spacer between the bracket and head plate. (passenger side).

Use (2) 3/8-16 x 5 bolt.

Do not torque down yet

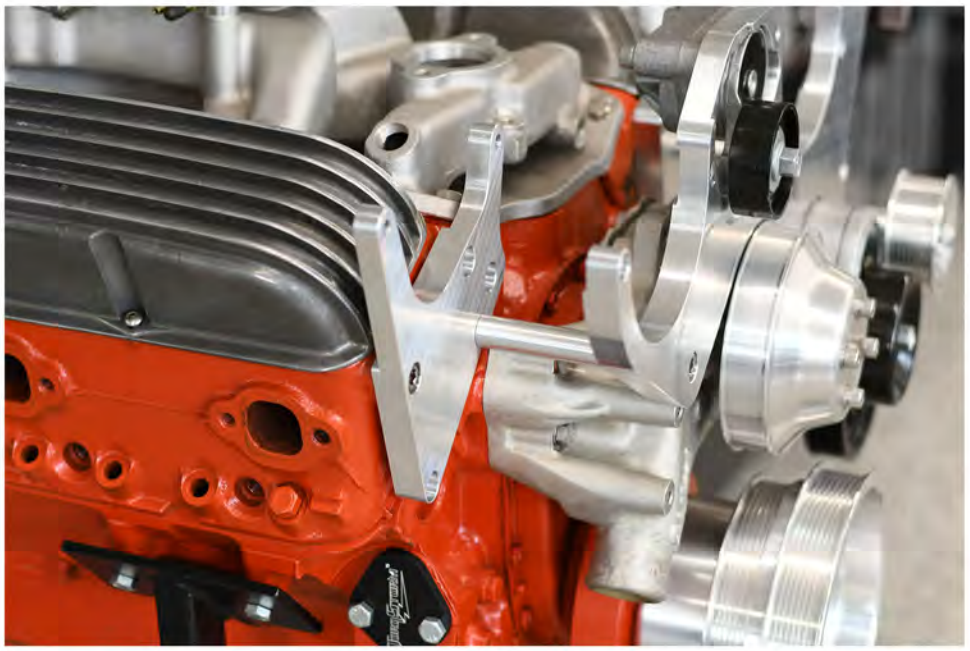

Now install (1) ARP-S-75-3250 spacer between the head plate and supercharger bracket. (drivers side)

Use (1) 3/8-16 x 5.00" bolt.

Do not torque down yet

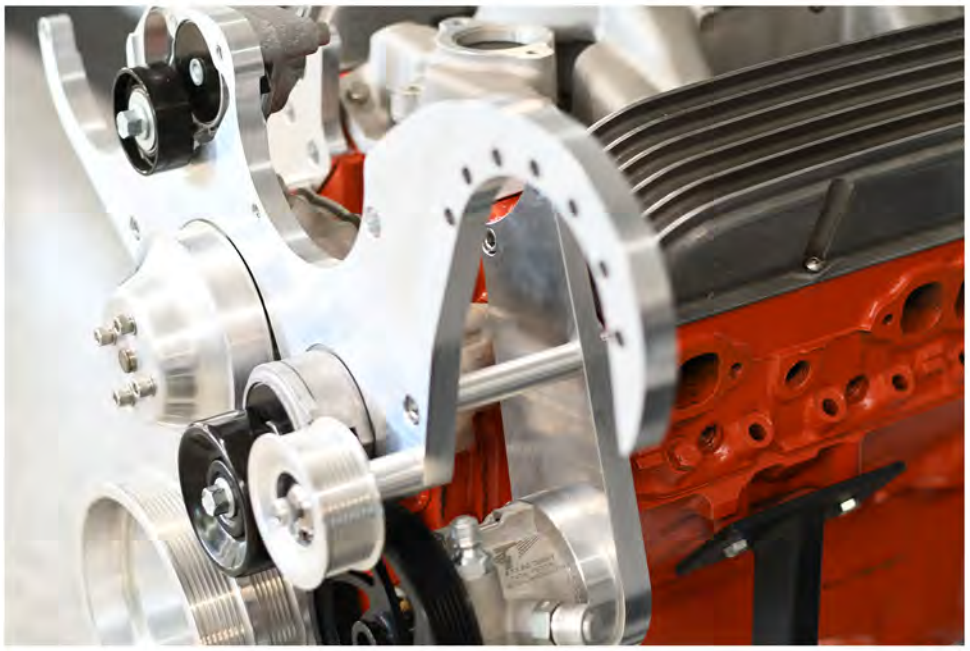

STEP 7

Install ARP-482831 Powermaster alternator using (1) 3/8-16 x 4" and (1) ARP-S-75-1375 spacer. Behind alt in front of bracket on the right.

And (1) 3/8-16 x 2.75" bolt on the left from the backside of the bracket.

Do not torque down yet

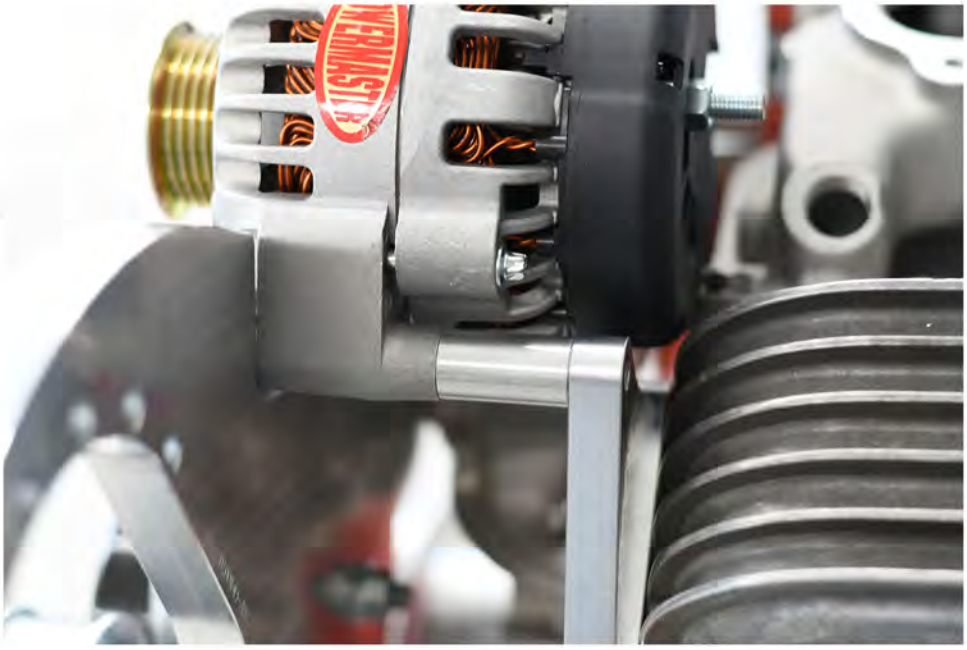



STEP 8

Install Sanden A/C compressor

HLY-199-102.

(2) M8-1.25 X 20MM in the front

and (2) M8-1.25 X 50MM

in the back. Use

(2)ARP-S-75-0445

spacers between the head plate

and

compressor.

Now torque all bolts

(M8 and 5/16) Torque to

17 ft lbs

(3/8-16) Torque to 29 ft lbs







STEP 9

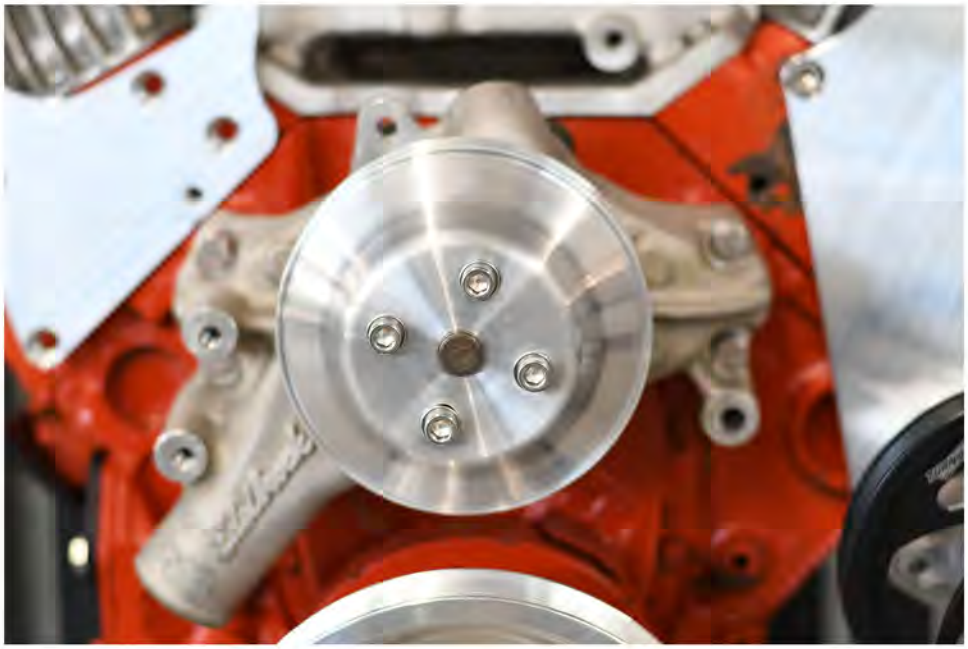

Install ARP-GM50036 SBC waterpump pulley using (4) M8 X 1.25 X 20mm bolts and AN washers.

Torque to 17 ft lbs

STEP 10



Install each supercharger head unit ARP-TORQ-10001 using (7) 3/8-16 x 1 1/4" bolts and AN washers.

Torque to 29 ft. lbs

Clock the compressor housing to desired outlet location. Loosen v-band nut and rotate. To tighten, only go until the compressor housing is unable to rotate. 1/8-1/4" of threads showing.

STEP 11

Install belts as shown.

Refer to layout

sheet for proper belt number

per your kit.

6 rib accessory

8 rib supercharger





STEP 12



Install carb hat of your choice. (Not included in twin kits)

Make sure the o-ring is also in the nut and everthing is seated properly.

The twin kits do not include plumbing to your carb or TB injection. For this we suggest sourcing 3" or larger piping and couplers/ clamps online and fitting them per your specific vehicle.

STEP 13



Hook up BOV to manifold vacuum source using supplied 7/32 hose.

STEP 14

Install air filter on supercharger inlet and tighten clamp.

Now you are through with installing your supercharger kit. Follow on to the next pages for more important information on setting up your engine for your TorqStorm Supercharger.



- *Replace all spark plugs with one or two heat ranges cooler.*
- *Fuel/ Ignition managment system must be tuned when installing Torqstorm Supercharger.*
- *Reconnect battery*
- *Double check all fittings, bolts, clamps. Make sure all wires and lines are properly secured with clamps or wire ties .*
- *Make sure fuel tank is filled with 91 octane or higher fuel.*
- *Start engine and allow to idle a few minutes then shut down.*
- *Recheck to be sure that no hoses, wires, ect are near the exhaust, headers, or supercharger components.*
- *Recheck tune before commencing test drive.*
- *After test drive examine all bolts, belts and check for leaks or running issues before finishing with the vehicle.*
- *Oil must be changed every 10k miles or once a year, whichever comes first.*
- *Order oil direct from TorqStorm. Part number ARP-OIL-MTL*
- *Your TorqStorm Supercharger will have a 1 year limited warranty from the date on your paid invoice.*

Additional information for Boost

- It is suggested to run a wideband o2 sensor to monitor correct air/fuel ratio. 11.5 is ideal for 91 octane or higher pump gas.

- PLEASE TAKE SPECIAL NOTE: Operating the vehicle without all the sub assemblies completed and properly installed and working may cause FAILURE OF MAJOR ENGINE COMPONENTS.

- If you have any questions or concerns contact us at sales@torqstorm.com

- Torqstorm superchargers come from the factory filled with 6 oz of ARP-OIL-MTL

-Supercharger is ready to run

KIT DIMENSIONS

TOP

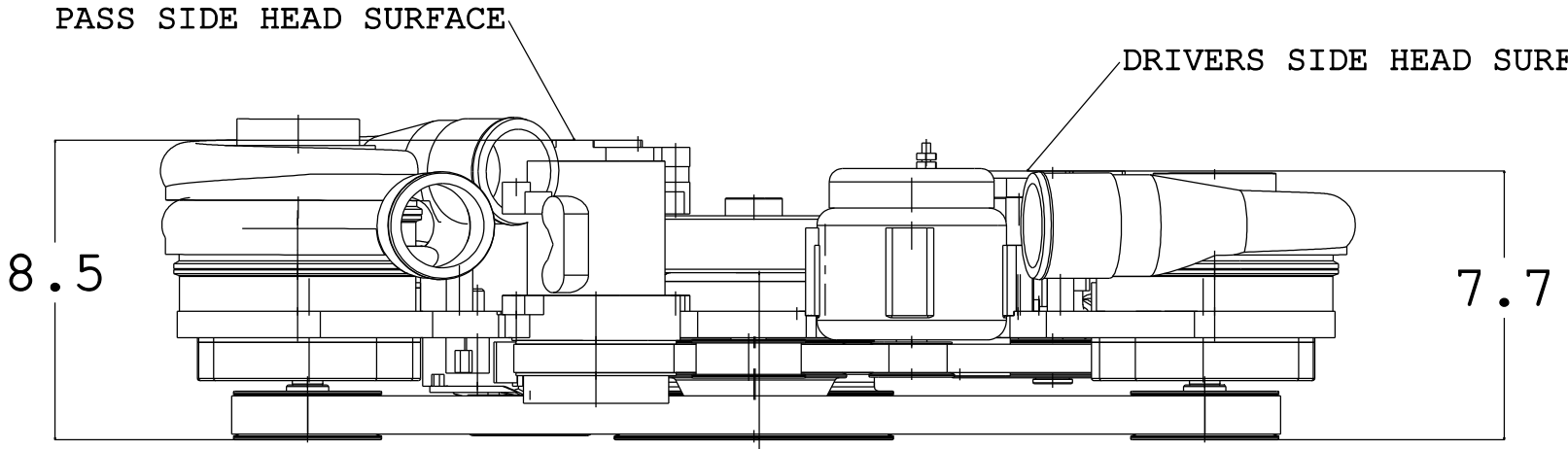

4.8

FRONT OF PULLEY
TO DAMPER SURFACE

Description	FRONT KIT DIMENSIONS
Part #	ARP-K-GM-SBC-2X

TORQSTORM® BILLET SUPERCHARGERS

09/09/2019

SUPERCHARGER BRACKET LAYOUT WITH AC DELETE

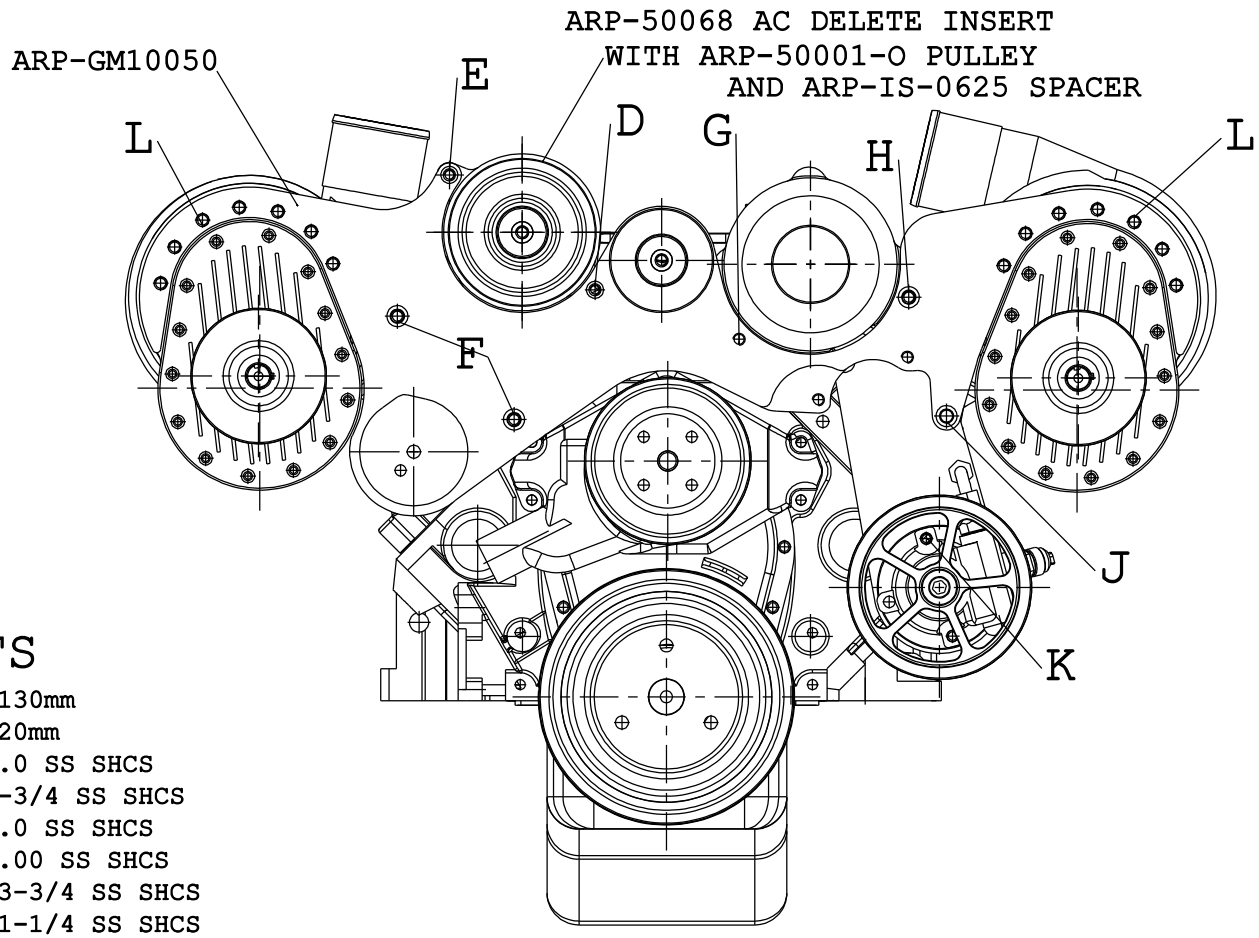

BOLTS

D = 1 @ M8-1.25 x 130mm
E = 1 @ M8-1.25 x 20mm
F = 2 @ 3/8-16 x 5.0 SS SHCS
G = 1 @ 3/8-16 x 2-3/4 SS SHCS
H = 1 @ 3/8-16 x 4.0 SS SHCS
J = 1 @ 3/8-16 x 5.00 SS SHCS
K = 2 @ 5/16-18 x 3-3/4 SS SHCS
L = 14 @ 3/8-16 x 1-1/4 SS SHCS

SPACERS

D = 1 @ ARP-S-75-3850 (BETWEEN BRACKETS)
F = 2 @ ARP-S-75-4125 (BETWEEN BRACKETS)
H = 1 @ ARP-S-75-1375 (BEHIND ALT IN FRONT OF BRACKET)
J = 1 @ ARP-S-75-3250 (BETWEEN BRACKETS)

Description
SUPERCHARGER BRACKET LAYOUT

Part #
ARP-K-GM-SBC-2X AC DELETE

TORQSTORM® BILLET SUPERCHARGERS

22/07/2019

BELT ROUTING

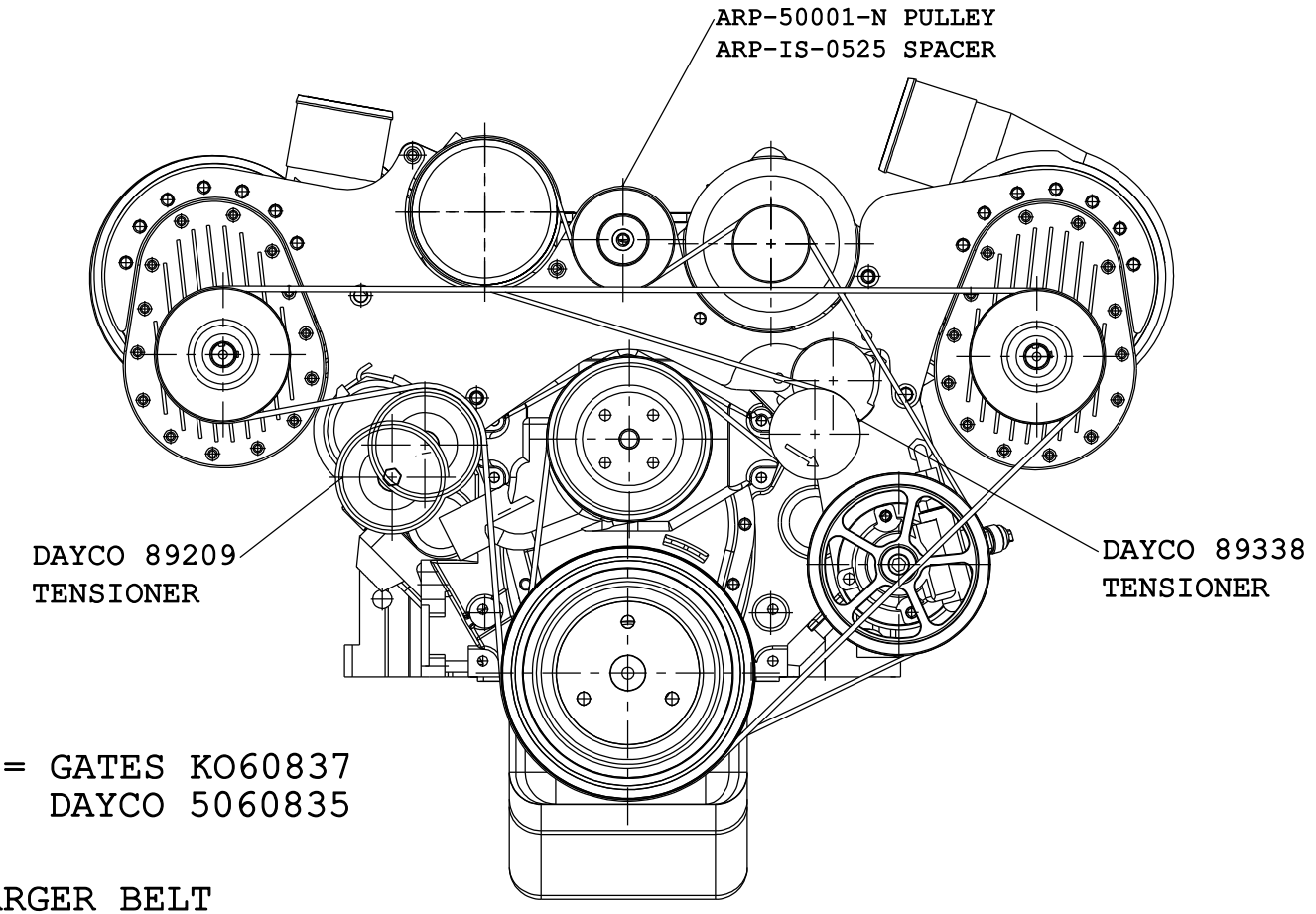

ACCESSORY BELT = GATES KO60837
DAYCO 5060835

SUPERCHARGER BELT

3.100 & 3.250 PULLEYS = GATES K080740
DAYCO 5080740

3.500 PULLEYS = GATES K080751
DAYCO 5080750

4.00 PULLEYS = GATES K080765
DAYCO 5080765

Description
BELT ROUTING

Part #
ARP-K-GM-SBC-2X

TORQSTORM® BILLET SUPERCHARGERS

02/04/2019

KIT DIMENSIONS
FRONT

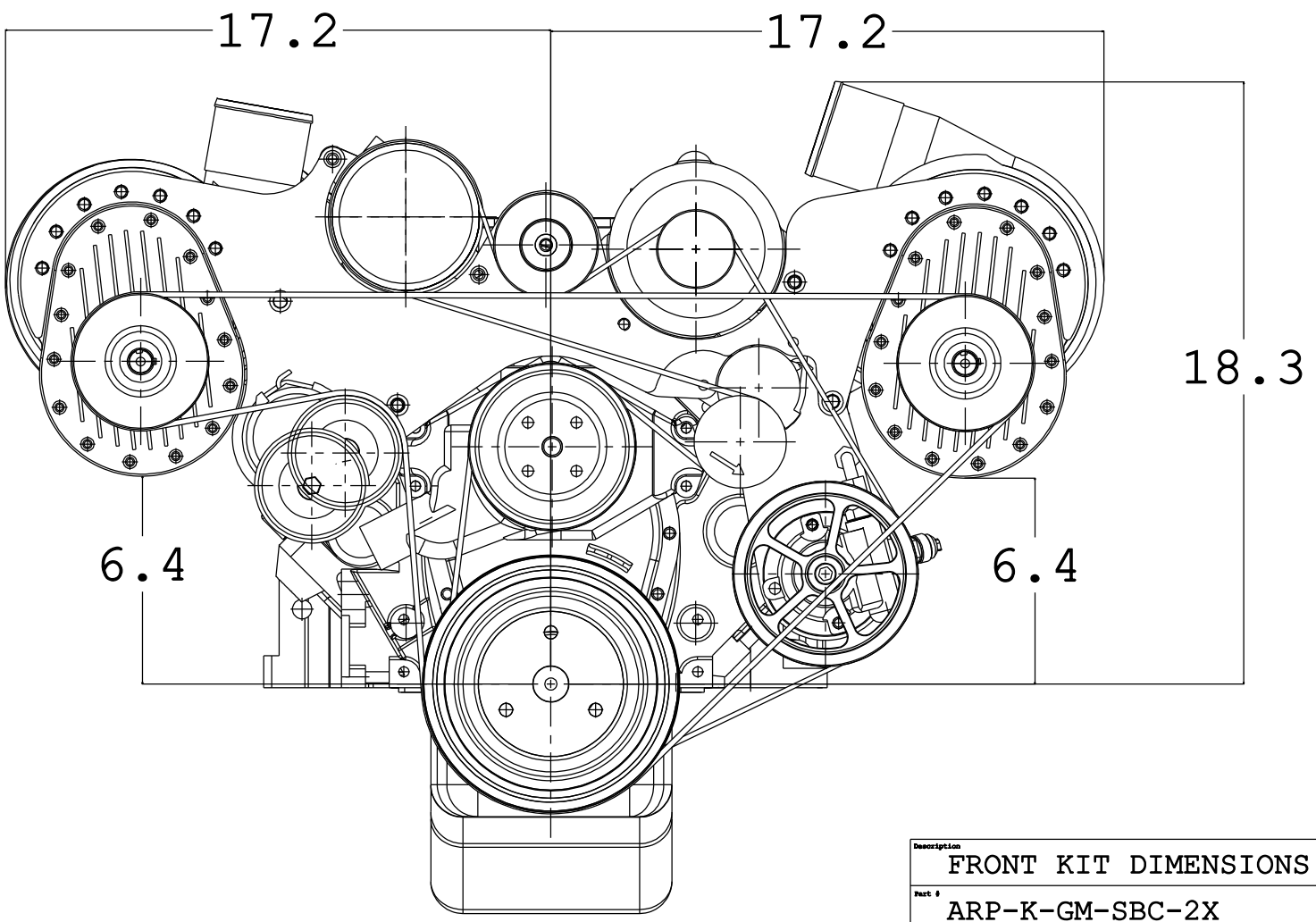

Description	FRONT KIT DIMENSIONS
Part #	ARP-K-GM-SBC-2X

TORQSTORM® BILLET SUPERCHARGERS

09/09/2019

HEAD BRACKET LAYOUT

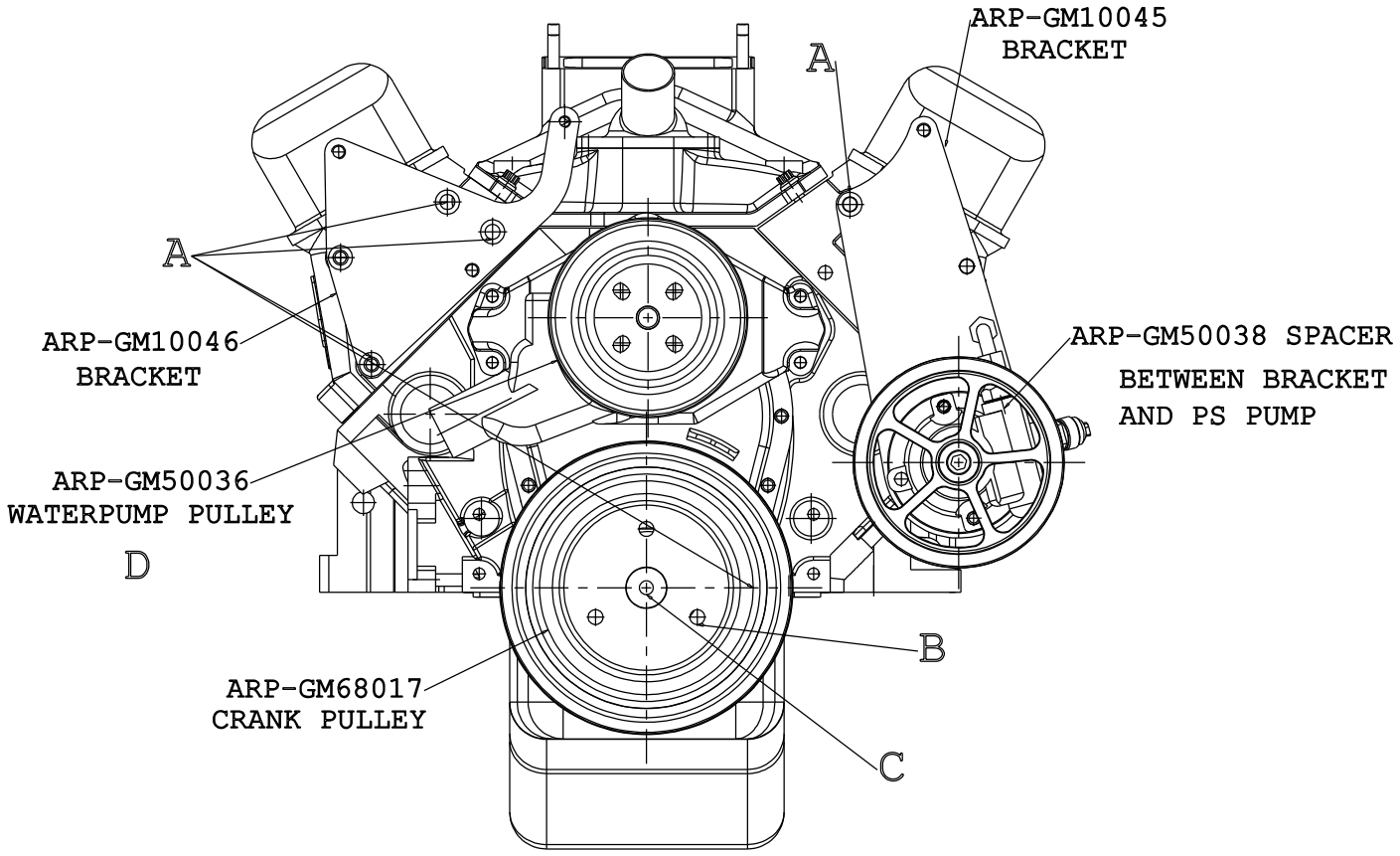

A = 5 @ 3/8-16 x 1.0 SS SHCS (QTY DEPENDS ON HEADS USED)
B = 3 @ 3/8-24 x 1.00 SS SHCS & WASHER
C = 1 @ 7/16-20 x 3.0 HHB
C = 1 ARP-GM50024 Washer
D = 4 @ 5/16 x 3/4 SS SHCS

Description	HEAD BRACKET LAYOUT
Part #	ARP-K-GM-SBC-2X

TORQSTORM® BILLET SUPERCHARGERS

02/04/2019

SUPERCHARGER BRACKET LAYOUT

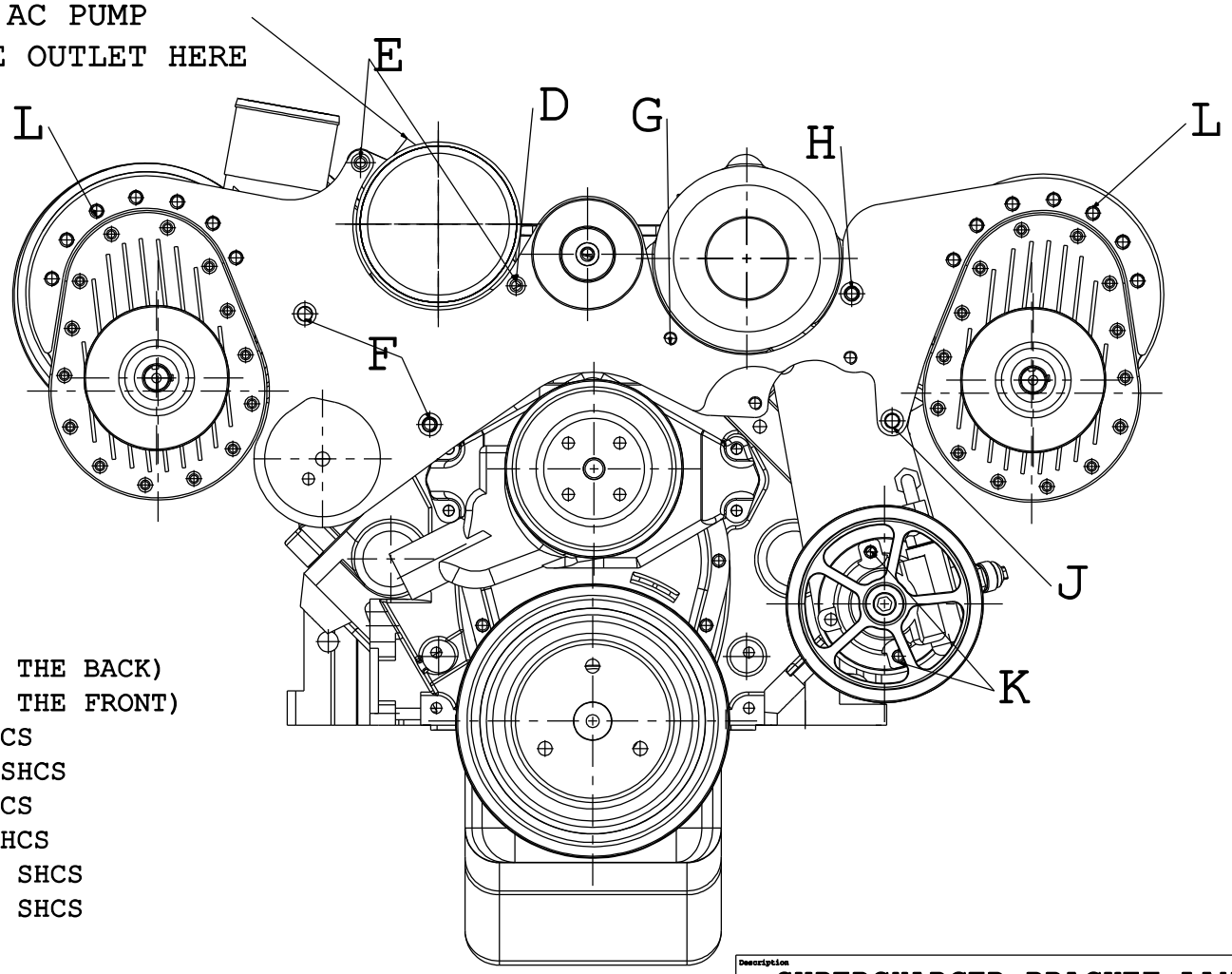

BOLTS

D = 1 @ M8-1.25 x 50mm (IN THE BACK)
E = 2 @ M8-1.25 x 20mm (IN THE FRONT)
F = 2 @ 3/8-16 x 5.0 SS SHCS
G = 1 @ 3/8-16 x 2-3/4 SS SHCS
H = 1 @ 3/8-16 x 4.0 SS SHCS
J = 1 @ 3/8-16 x 5.00 SS SHCS
K = 2 @ 5/16-18 x 3-3/4 SS SHCS
L = 14 @ 3/8-16 x 1-1/4 SS SHCS

SPACERS

D = 2 @ ARP-S-75-0445 (BETWEEN PUMP & BRACKET)
F = 2 @ ARP-S-75-4125 (BETWEEN BRACKETS)
H = 1 @ ARP-S-75-1375 (BEHIND ALT IN FRONT OF BRACKET)
J = 1 @ ARP-S-75-3250 (BETWEEN BRACKETS)

Description: SUPERCHARGER BRACKET LAYOUT

Part #: ARP-K-GM-SBC-2X

TorqStorm® BILLET SUPERCHARGERS

02/04/2019

Oil Change Instructions

OIL CHANGE MUST BE PERFORMED EVERY 10,000 MILES OR ONCE A YEAR, WHICHEVER COMES FIRST.

FAILURE TO DO SO WILL VOID YOUR WARRANTY.



YOU CAN PURCHASE OIL

FROM US DIRECTLY AT

TORQSTORM.COM

PART # ARP-OIL-MTL



STEP 1

Remove your supercharger from your car and flip over to backside to access the drain plug.

STEP 2

Remove drain plug with a 1/4" allen and drain oil.

STEP 3

Pour in your Torqstorm specific oil, 6oz into the same hole you drained from.



STEP 4

Replace the drain plug.

Torque to 15 ft lbs



STEP 5

Re-install the supercharger on your vehicle.

Take note of the mileage on your odometer.

Instructions
BOV MAINTENANCE

In many cases your vehicle is exposed to harsh weather and road debris. Regular maintenance is important in order for your mechanical pieces to function properly. BOV inspection every oil change interval.

STEP 1

You can leave the body of the BOV attached to your plumbing as long as your able to remove the lid from your BOV. Remove the lid, counter clockwise, there is a strong spring beneath it.



STEP 2

Remove the spring and brass piston. Clean and inspect the piston and spring for any abnormal wear or defects.



STEP 3

Using Silicone paste apply a modest amount inside the body of the BOV.



STEP 4

Install the brass piston into the body of the BOV, checking to make sure it goes in and out smoothly.



STEP 5

Install the spring into the piston, making sure it is seated flat in the "Cup"



STEP 6

Install the BOV cap. Make sure the spring is seated properly. Be careful not to cross thread it. A little wd-40 on the threads will help it to assemble easier.



STEP 7

Attach your vacuum line and check operation.



Accelerated Racing Products, LLC

Billet Supercharger Limited 1-Year Warranty

Accelerated Racing Products, LLC ("we," "our" or "us") warrants only to the original consumer purchaser ("you" or "your") that your new Billet Supercharger head unit (referred to herein as your "supercharger") shall be free of defects in workmanship and materials for 1 year, from the date of purchase. This Limited 1-Year Warranty (this "Limited Warranty") does not extend to any subsequent owner or other transferee of your supercharger and shall terminate upon any transfer of your supercharger. This Limited Warranty is effective for superchargers purchased on or after 1/01/2023.

Our authorization must be obtained before you return the supercharger for warranty inspection. Superchargers that we authorize to be inspected must be shipped freight prepaid, at your expense. Additional warranty procedures are set forth below.

Subject to the other limitations set forth in this Limited Warranty, we will, in our sole discretion, either repair or replace the supercharger or portion thereof subject to warranty free of charge. No refunds or credits will be allowed.

Superchargers will not qualify for warranty if (i) the supercharger pulley or impeller has been removed or changed, (ii) the pulley or impeller warranty seal has been broken or tampered with and/or (iii) the kit parts have been altered or improperly installed.

Further, this Limited Warranty does not cover any defects or damage due to: (i) transportation; (ii) storage; (iii) improper installation or use; (iii) failure to follow the product instructions; (iv) alterations or modifications without our prior written consent; (v) use of a component or accessory not approved by us; (vi) unauthorized repair; (vii) normal wear and tear; or (viii) external causes such as accidents, abuse, misuse or other actions or events beyond our reasonable control.

Superchargers that we repair or replace will be returned to you with ground transportation charges prepaid by us, within the continental United States, or to the point of embarkation within the continental United States, via UPS ground (or similar) service. You will be responsible for any charges associated with expedited delivery or freight charges outside the continental United States.

Superchargers authorized to be returned and inspected but which do not qualify for warranty, and which are not repaired at your expense, will be subject to a US$100.00 inspection fee and returned to you, at your expense.

Warranty Procedure

Go to the website and fill out the Warranty/Repair form at: https://torqstorm.com/warranty-repair-form/

1. Serial number of the supercharger.
2. Description of the problem.
3. Make, Model, and Year of the vehicle.
4. Your name, shipping address (No PO Boxes allowed), and your daytime telephone number.
5. A copy of your original purchase invoice.
6. A clear picture of supercharger mounted in the vehicle.

Upon receipt of the above, if warranty service is appropriate, an Accelerated Racing Products Return Authorization Number will be assigned. You should then send the supercharger or other defective part, with all of the above information to:

Accelerated Racing Products LLC
2909 Buchanan Ave SW
Wyoming, MI 49548

The return authorization number must be included on the package. Freight collect shipments will be refused and returned to the sender at the sender's expense.

Disclaimers

THIS LIMITED WARRANTY GIVES YOU SPECIFIC LEGAL RIGHTS AND YOU MAY ALSO HAVE OTHER RIGHTS, WHICH VARY FROM STATE TO STATE.

WE HEREBY LIMIT THE DURATION AND REMEDIES OF ALL IMPLIED WARRANTIES, INCLUDING WITHOUT LIMITATION THE WARRANTIES OF MERCHANTABILITY AND FITNESS FOR A PARTICULAR PURPOSE, TO ONE YEAR.

SOME STATES DO NOT ALLOW LIMITATIONS ON HOW LONG AN IMPLIED WARRANTY LASTS, SO THE ABOVE LIMITATION MAY NOT APPLY TO YOU.

OUR RESPONSIBILITY FOR DEFECTIVE SUPERCHARGERS IS LIMITED TO REPAIR OR REPLACEMENT AS DESCRIBED ABOVE IN THIS LIMITED WARRANTY.

Limitation of Liability

THE REMEDIES DESCRIBED ABOVE ARE YOUR SOLE AND EXCLUSIVE REMEDIES AND OUR ENTIRE LIABILITY FOR ANY BREACH OF THIS LIMITED WARRANTY. OUR LIABILITY SHALL UNDER NO CIRCUMSTANCES EXCEED THE ACTUAL AMOUNT PAID BY YOU FOR THE DEFECTIVE SUPERCHARGER, NOR SHALL WE UNDER ANY CIRCUMSTANCES BE LIABLE FOR ANY CONSEQUENTIAL, INCIDENTAL, SPECIAL OR PUNITIVE DAMAGES OR LOSSES, WHETHER DIRECT OR INDIRECT (INCLUDING, WITHOUT LIMITATION, ENGINE DAMAGE).

SOME STATES DO NOT ALLOW THE EXCLUSION OR LIMITATION OF INCIDENTAL OR CONSEQUENTIAL DAMAGES, SO THE ABOVE LIMITATION OR EXCLUSION MAY NOT APPLY TO YOU.