ARP-K-GM-BBC2XRA *BIG BLOCK CHEVY TWIN*

INSTALLATION GUIDE



QUALITY AMERICAN MADE SUPERCHARGERS

TorqStorm® BILLET SUPERCHARGERS

Installation Instructions
BBC TWIN SUPERCHARGER KIT
ARP-K-GM-BBC2XRA

STEP 1



Mount the supercharger head

bracket ARP-GM10052

(drivers side)

using (3) 3/8-16 x 1.0 bolt or 7/16 bolts

depending on your heads.

Torque to 29 ft lbs

STEP 2



Mount the supercharger head

bracket ARP-GM10089

(Passenger side) with

(3) 3/8-16 x 1.0 bolt or 7/16 bolts

depending on your heads.

Torque to 29 ft lbs

STEP 3

Mount the waterpump pulley ARP-GM50032 using (4) 5/16 -24 x 3/4 bolts and AN washers.

Torque to 19 ft. lbs.



STEP 4

Mount the crank pulley ARP-GM68058 using (3) 3/8-24 x 1.0 bolts and AN washers.

Torque to 29 ft. lbs



STEP 5

Remove the tensioner and mount the supercharger bracket (drivers side) ARP-GM10007 using (4) 3/8-16 x 4.25" shcs bolts and (4) 3.250" spacers.



Torque all bolts now to 29 ft. lbs.

Re-install tensioner and torque to 29 ft. lbs.



STEP 6

Install the power steering pump and bracket (ARP-GM10054) using (2) 7/16-14 x 1.0 bolts and AN washers to mount the bracket to the block.

Torque to 29 ft. lbs.



(2) 5/16-18 x 2 3/4 bolts to mount the pump to the bracket.

Torque to 19 ft. lbs



STEP 7

Remove the idlers and supercharger tensioner to gain access to the mounting bolt holes. Swing the accessory tensioner forward to access the one mounting bolt hole. Install the supercharger bracket ARP-GM10090. Using (4) 3/8-16 x 3.25" bolts (A) and (4) ARP-S-10-2.250" spacers. Then re-install idler pulleys.

Torque all bolts to 29 ft. lbs.

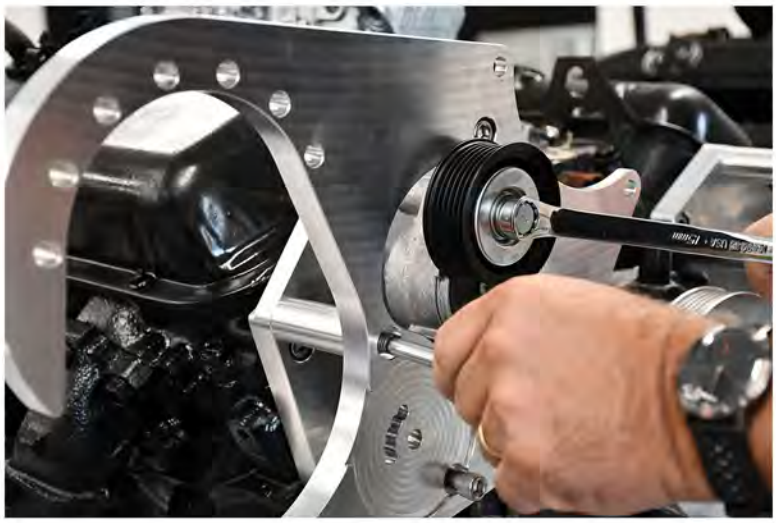

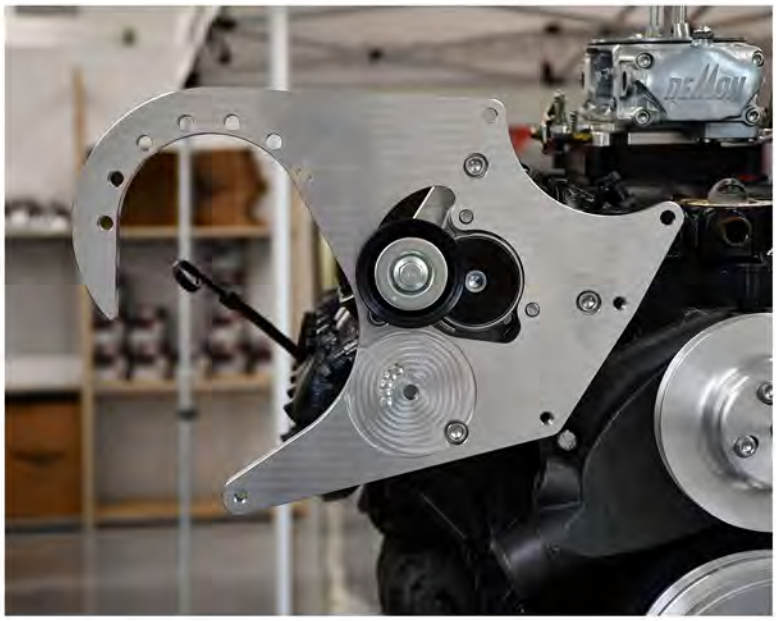

STEP 8

Install the alternator using (2) 3/8-16 x 2.75" SHCS with washers and nuts.

Torque to 29 ft. lbs.

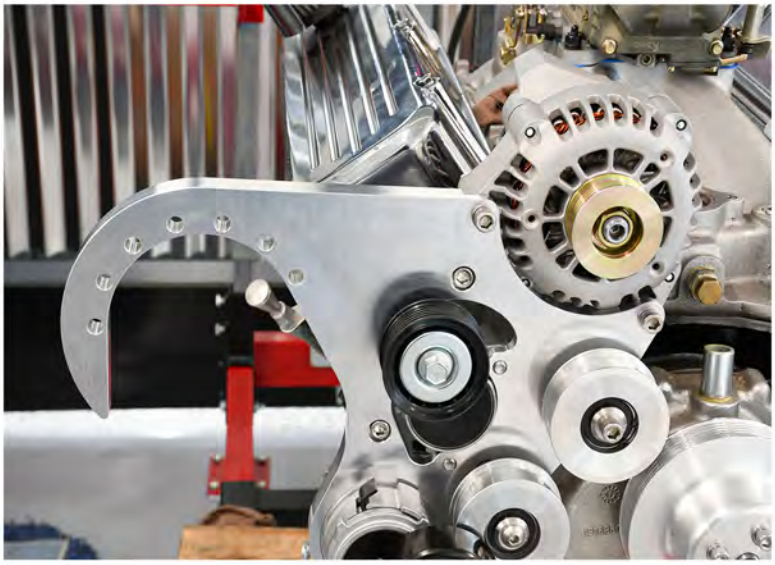

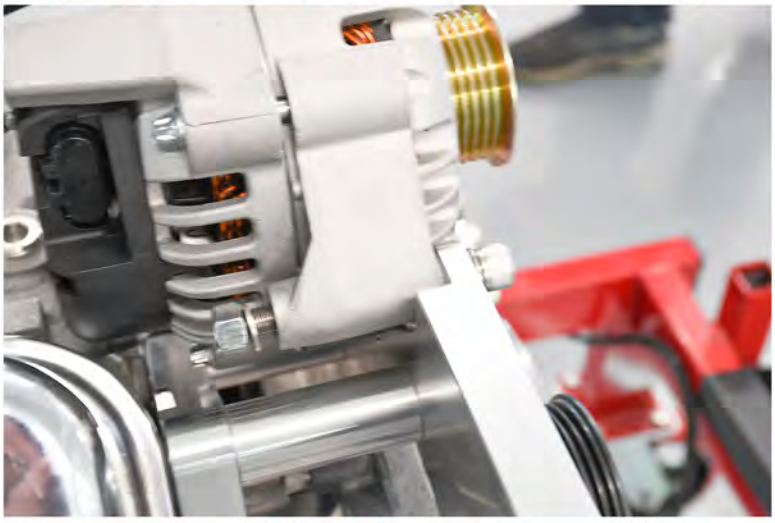



STEP 9

Make sure to re-install all idlers and spacers in the correct positions

Torque to 29 ft lbs



STEP 10

Install superchargers to drivers and passenger side brackets using (14) 3/8-16 x 1.25" SHCS and washers.

Torque to 29 ft. lbs

STEP 11

Install accessory belt as shown.

Then install drivers side then pass side supercharger belts.



Adjust the supercharger outlet for plumbing alignment prior to mounting on bracket.

Loosen the v-band clamp to move and

re-tighten to 75-in. lbs.

Do not over tighten or you will stetch out the clamp.



STEP 12

Now that your superchargers are mounted. It is time to install your air cleaners. Utilizing the 3.5" clamps and 45 degree couplers and tubes, mount the filter in your engine bay to your liking.





STEP 13

Install your carb hat (not included in this kit) and (2) 52 mm BOV's as well as the aluminum weld in bungs. Connect them both to a vaccuum source off from the intake below the carb.





- *Replace all spark plugs with one or two heat ranges cooler.*
- *Fuel/ Ignition managment system must be tuned when installing Torqstorm Supercharger.*
- *Reconnect battery*
- *Double check all fittings, bolts, clamps. Make sure all wires and lines are properly secured with clamps or wire ties .*
- *Make sure fuel tank is filled with 91 octane or higher fuel.*
- *Start engine and allow to idle a few minutes then shut down.*
- *Recheck to be sure that no hoses, wires, ect are near the exhaust, headers, or supercharger components.*
- *Recheck tune before commencing test drive.*
- *After test drive examine all bolts, belts and check for leaks or running issues before finishing with the vehicle.*
- *Oil must be changed every 10k miles or once a year, whichever comes first.*

Order oil direct from TorqStorm. Part number ARP-OIL-MTL

Your TorqStorm Supercharger will have a 1 year limited warranty from the date on your paid invoice.

Additional information for Boost

- It is suggested to run a wideband o2 sensor to monitor correct air/fuel ratio. 11.5 is ideal for 91 octane or higher pump gas.

- PLEASE TAKE SPECIAL NOTE: Operating the vehicle without all the sub assemblies completed and properly installed and working may cause FAILURE OF MAJOR ENGINE COMPONENTS.

- If you have any questions or concerns contact us at sales@torqstorm.com

- Torqstorm superchargers come from the factory filled with 6 oz of ARP-OIL-MTL

-Supercharger is ready to run

BELT ROUTING

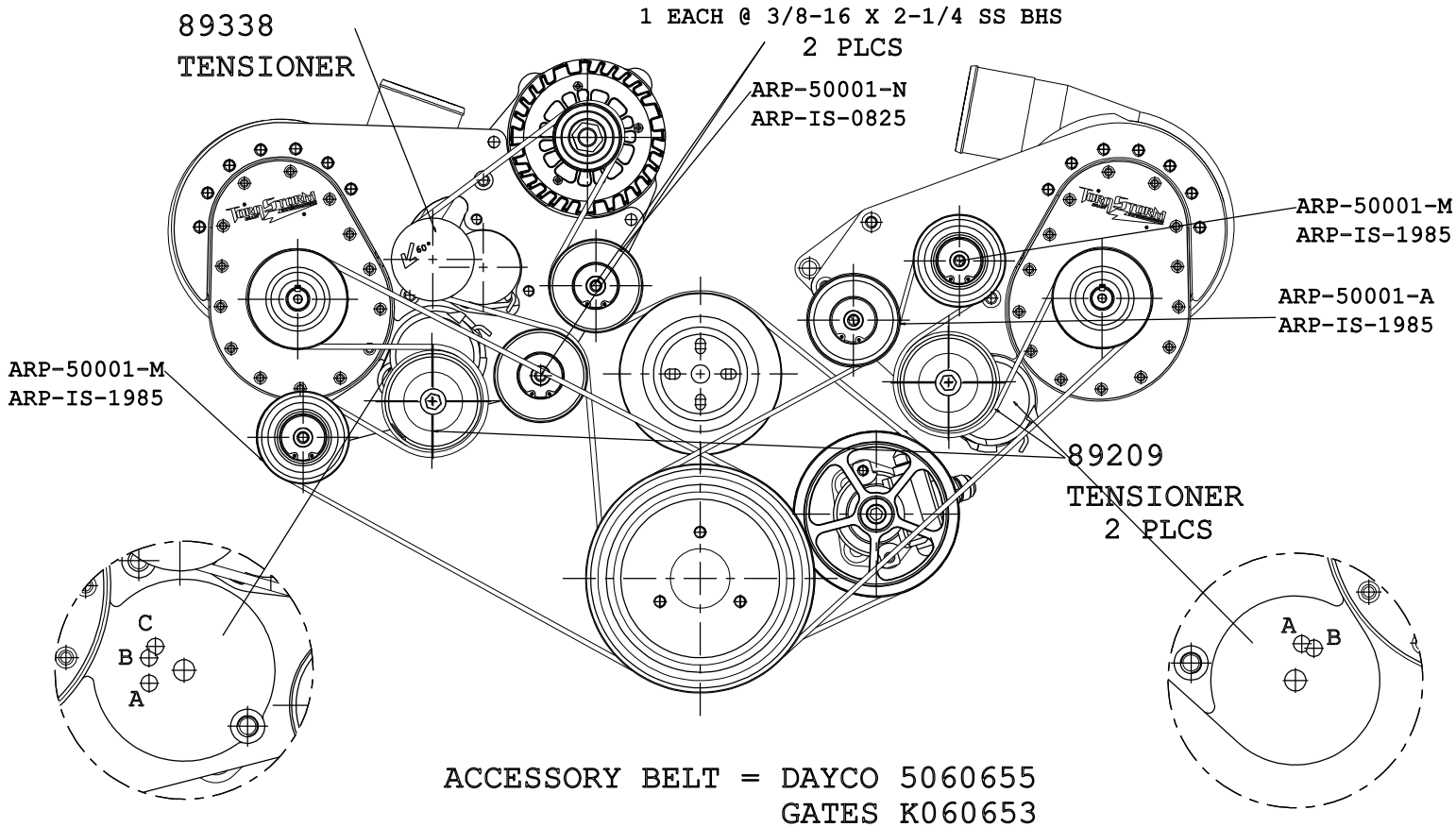

ACCESSORY BELT = DAYCO 5060655
GATES K060653

PASSENGER SIDE

3.10" PULLEY = PIN A = DAYCO 5080680
GATES K080680

3-1/4" PULLEY = PIN B = DAYCO 5080670
GATES K080670

3-1/2" PULLEY = PIN C = DAYCO 5080670
GATES K080670

4.0" PULLEY = PIN B = DAYCO 5080680
GATES K080680

DRIVERS SIDE

3.10" PULLEY = PIN A = DAYCO 5080680
GATES K080680

3-1/4" PULLEY = PIN A = DAYCO 5080680
GATES K080680

3-1/2" PULLEY = PIN B = DAYCO 5080680
GATES K080680

4.0" PULLEY = PIN A = DAYCO 5080700
GATES K080700

Description
BELT ROUTING

Part #
ARP-K-GM-BBC-2XRA

TORQSTORM® BILLET SUPERCHARGERS

11/12/2018

HEAD BRACKET LAYOUT

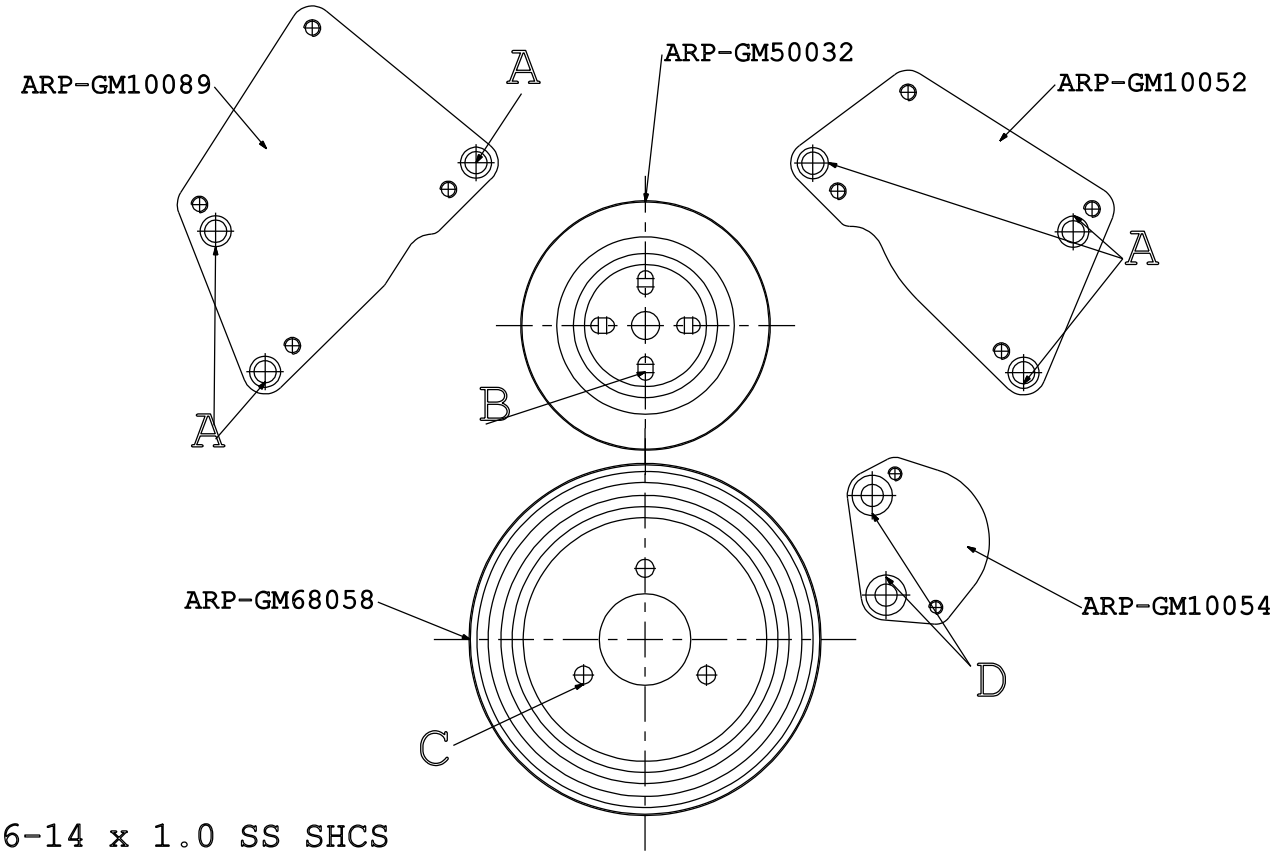

A = 6 @ 7/16-14 x 1.0 SS SHCS
or 3/8-16 x 1.0 SS SHCS WITH WASHERS
B = 4 @ 5/16-24 x 3/4 SS SHCS
C = 3 @ 3/8-24 x 1.0 SS SHCS
or 3/8-16 x 1.0 SS SHCS WITH WASHERS
D = 2 @ 7/16-14 x 1.0 SS FHS

Description	HEAD BRACKET LAYOUT
Part #	ARP-K-GM-BBC-2XRA

TORQSTORM® BILLET SUPERCHARGERS

11/12/2018

KIT DIMENSIONS

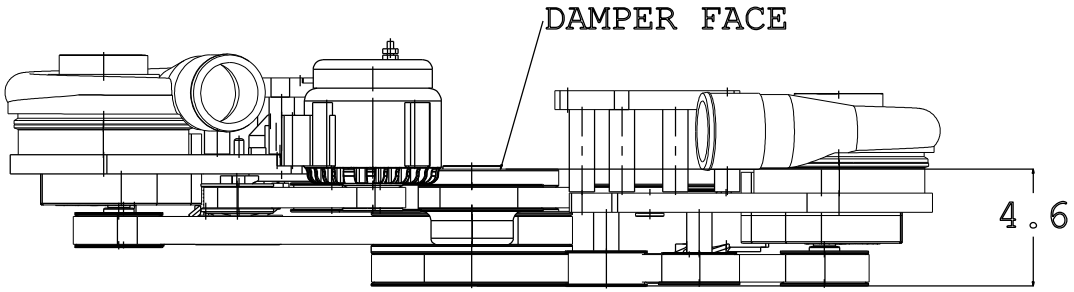

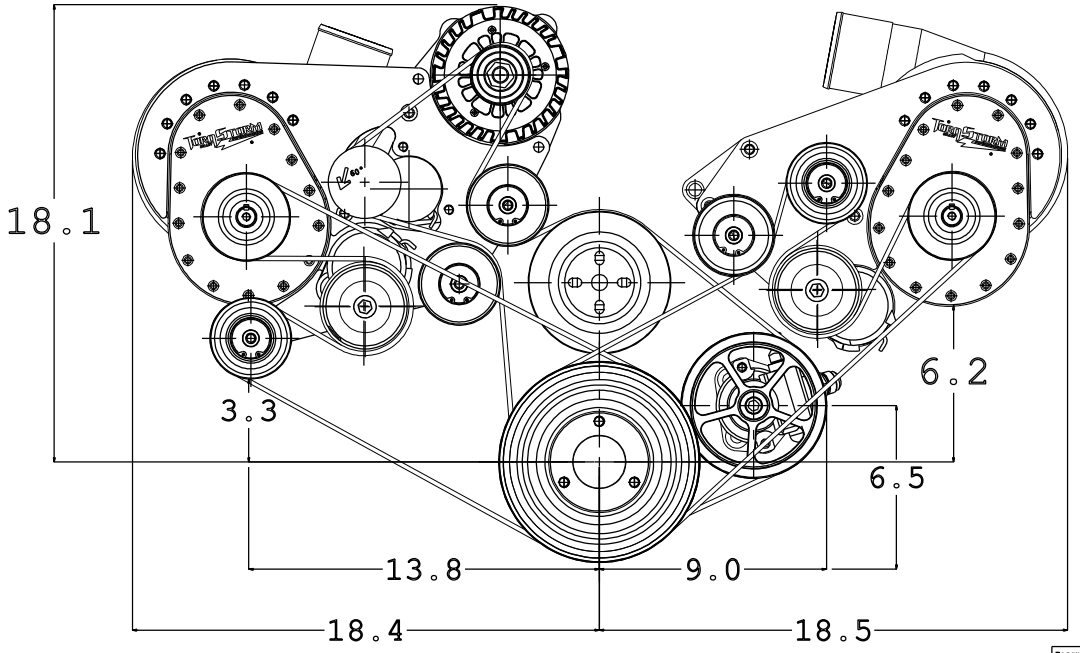

MUST USE SHORT
WATERPUMP

Description	KIT DIMENSIONS
Part #	ARP-K-GM-BBC-2XRA

TORQSTORM® BILLET SUPERCHARGERS

11/12/2018

SUPERCHARGER BRACKET LAYOUT

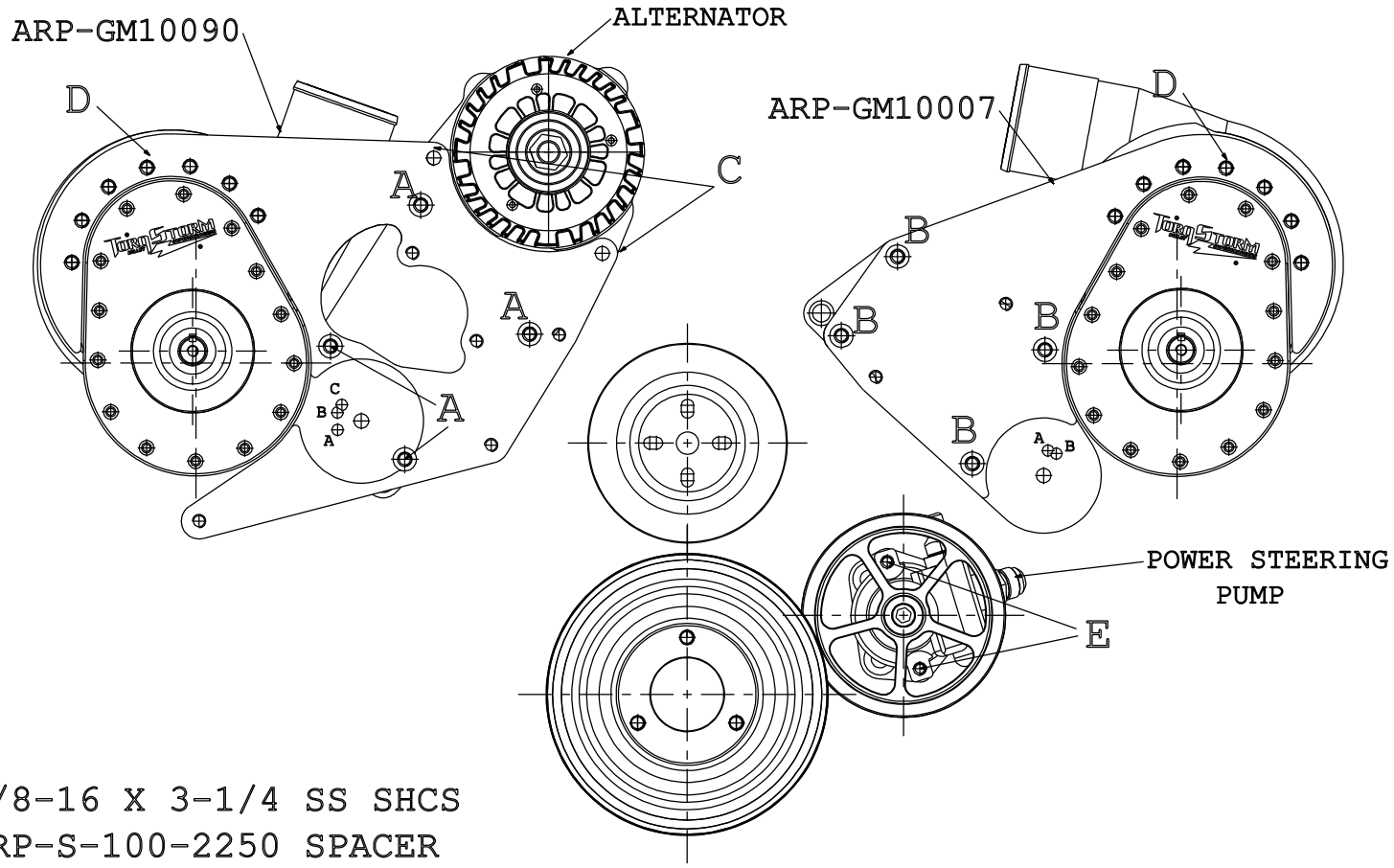

A = 4 @ 3/8-16 X 3-1/4 SS SHCS
A = 4 @ ARP-S-100-2250 SPACER
B = 4 @ 3/8-16 X 4-1/4 SS SHCS
B = 4 @ ARP-S-100-3250 SPACER
C = 2 @ 3/8-16 X 2-3/4 SS SHCS W/ WASHERS AND NUTS
D = 14 @ 3/8-16 X 1-1/4 SS SHCS W/ WASHERS
E = 2 @ 5/16-18 x 2-3/4 SS SHCS W WASHERS

Description
SUPERCHARGER BRACKET LAYOUT

Part #
ARP-K-GM-BBC-2XRA

TORQSTORM® BILLET SUPERCHARGERS

11/12/2018

Oil Change Instructions

OIL CHANGE MUST BE PERFORMED EVERY 10,000 MILES OR ONCE A YEAR, WHICHEVER COMES FIRST.

FAILURE TO DO SO WILL VOID YOUR WARRANTY.



YOU CAN PURCHASE OIL

FROM US DIRECTLY AT

TORQSTORM.COM

PART # ARP-OIL-MTL



STEP 1

Remove your supercharger from your car and flip over to backside to access the drain plug.

STEP 2

Remove drain plug with a 1/4" allen and drain oil.

STEP 3

Pour in your Torqstorm specific oil, 6oz into the same hole you drained from.



STEP 4

Replace the drain plug.

Torque to 15 ft lbs



STEP 5

Re-install the supercharger on your vehicle.

Take note of the mileage on your odometer.

Instructions
BOV MAINTENANCE

In many cases your vehicle is exposed to harsh weather and road debris. Regular maintenance is important in order for your mechanical pieces to function properly. BOV inspection every oil change interval.

STEP 1

You can leave the body of the BOV attached to your plumbing as long as your able to remove the lid from your BOV. Remove the lid, counter clockwise, there is a strong spring beneath it.



STEP 2

Remove the spring and brass piston. Clean and inspect the piston and spring for any abnormal wear or defects.



STEP 3

Using Silicone paste apply a modest amount inside the body of the BOV.



STEP 4

Install the brass piston into the body of the BOV, checking to make sure it goes in and out smoothly.



STEP 5

Install the spring into the piston, making sure it is seated flat in the "Cup"



STEP 6

Install the BOV cap. Make sure the spring is seated properly. Be careful not to cross thread it. A little wd-40 on the threads will help it to assemble easier.



STEP 7

Attach your vacuum line and check operation.



Accelerated Racing Products, LLC

Billet Supercharger Limited 1-Year Warranty

Accelerated Racing Products, LLC ("we," "our" or "us") warrants only to the original consumer purchaser ("you" or "your") that your new Billet Supercharger head unit (referred to herein as your "supercharger") shall be free of defects in workmanship and materials for 1 year, from the date of purchase. This Limited 1-Year Warranty (this "Limited Warranty") does not extend to any subsequent owner or other transferee of your supercharger and shall terminate upon any transfer of your supercharger. This Limited Warranty is effective for superchargers purchased on or after 1/01/2023.

Our authorization must be obtained before you return the supercharger for warranty inspection. Superchargers that we authorize to be inspected must be shipped freight prepaid, at your expense. Additional warranty procedures are set forth below.

Subject to the other limitations set forth in this Limited Warranty, we will, in our sole discretion, either repair or replace the supercharger or portion thereof subject to warranty free of charge. No refunds or credits will be allowed.

Superchargers will not qualify for warranty if (i) the supercharger pulley or impeller has been removed or changed, (ii) the pulley or impeller warranty seal has been broken or tampered with and/or (iii) the kit parts have been altered or improperly installed.

Further, this Limited Warranty does not cover any defects or damage due to: (i) transportation; (ii) storage; (iii) improper installation or use; (iii) failure to follow the product instructions; (iv) alterations or modifications without our prior written consent; (v) use of a component or accessory not approved by us; (vi) unauthorized repair; (vii) normal wear and tear; or (viii) external causes such as accidents, abuse, misuse or other actions or events beyond our reasonable control.

Superchargers that we repair or replace will be returned to you with ground transportation charges prepaid by us, within the continental United States, or to the point of embarkation within the continental United States, via UPS ground (or similar) service. You will be responsible for any charges associated with expedited delivery or freight charges outside the continental United States.

Superchargers authorized to be returned and inspected but which do not qualify for warranty, and which are not repaired at your expense, will be subject to a US$100.00 inspection fee and returned to you, at your expense.

Warranty Procedure

Go to the website and fill out the Warranty/Repair form at: https://torqstorm.com/warranty-repair-form/

1. Serial number of the supercharger.
2. Description of the problem.
3. Make, Model, and Year of the vehicle.
4. Your name, shipping address (No PO Boxes allowed), and your daytime telephone number.
5. A copy of your original purchase invoice.
6. A clear picture of supercharger mounted in the vehicle.

Upon receipt of the above, if warranty service is appropriate, an Accelerated Racing Products Return Authorization Number will be assigned. You should then send the supercharger or other defective part, with all of the above information to:

Accelerated Racing Products LLC
2909 Buchanan Ave SW
Wyoming, MI 49548

The return authorization number must be included on the package. Freight collect shipments will be refused and returned to the sender at the sender's expense.

Disclaimers

THIS LIMITED WARRANTY GIVES YOU SPECIFIC LEGAL RIGHTS AND YOU MAY ALSO HAVE OTHER RIGHTS, WHICH VARY FROM STATE TO STATE.

WE HEREBY LIMIT THE DURATION AND REMEDIES OF ALL IMPLIED WARRANTIES, INCLUDING WITHOUT LIMITATION THE WARRANTIES OF MERCHANTABILITY AND FITNESS FOR A PARTICULAR PURPOSE, TO ONE YEAR.

SOME STATES DO NOT ALLOW LIMITATIONS ON HOW LONG AN IMPLIED WARRANTY LASTS, SO THE ABOVE LIMITATION MAY NOT APPLY TO YOU.

OUR RESPONSIBILITY FOR DEFECTIVE SUPERCHARGERS IS LIMITED TO REPAIR OR REPLACEMENT AS DESCRIBED ABOVE IN THIS LIMITED WARRANTY.

Limitation of Liability

THE REMEDIES DESCRIBED ABOVE ARE YOUR SOLE AND EXCLUSIVE REMEDIES AND OUR ENTIRE LIABILITY FOR ANY BREACH OF THIS LIMITED WARRANTY. OUR LIABILITY SHALL UNDER NO CIRCUMSTANCES EXCEED THE ACTUAL AMOUNT PAID BY YOU FOR THE DEFECTIVE SUPERCHARGER, NOR SHALL WE UNDER ANY CIRCUMSTANCES BE LIABLE FOR ANY CONSEQUENTIAL, INCIDENTAL, SPECIAL OR PUNITIVE DAMAGES OR LOSSES, WHETHER DIRECT OR INDIRECT (INCLUDING, WITHOUT LIMITATION, ENGINE DAMAGE).

SOME STATES DO NOT ALLOW THE EXCLUSION OR LIMITATION OF INCIDENTAL OR CONSEQUENTIAL DAMAGES, SO THE ABOVE LIMITATION OR EXCLUSION MAY NOT APPLY TO YOU.