
TORQ STORM
BILLET SUPERCHARGERS
BIG BLOCK CHEVY TWIN SUPERCHARGER KIT
ARP-K-GM-BBC2XR

Installation Instructions
BBC TWIN SUPERCHARGER KIT
ARP-K-GM-BBC2XR

STEP 1

Mount the supercharger head bracket ARP-GM10052 (drivers side) using (3) 3/8-16 x 1.0 bolts with washers or 7/16 with no washers, depending on your head choice.

Torque to 29 ft lbs



STEP 2

Mount the supercharger head bracket ARP-GM10064 (Passenger side) with (4) 7/16-14 x 1.0 or 3/8-16 x 1.0 bolts with washers, depending on your head choice.

Torque to 29 ft lbs



STEP 3

Install your factory waterpump pulley.

Confirm spacing is correct

on the v-belt groove after step 4

STEP 4

Mount the crank pulley

ARP-GM68067 using (3)

3/8-24 x 1.0 bolts and AN

washers.

Torque to 29 ft. lbs



STEP 5

Remove the tensioner and mount the supercharger bracket (drivers side) ARP-GM10007 using (4) 3/8-16 x 4.25" shcs and (4) 3.250" spacers.

Torque to 29 ft. lbs.

Re-install tensioner and torque to 29 ft. lbs.





STEP 6

Install the supercharger head unit using (7) 3/8x16-1.25" bolts and washers.

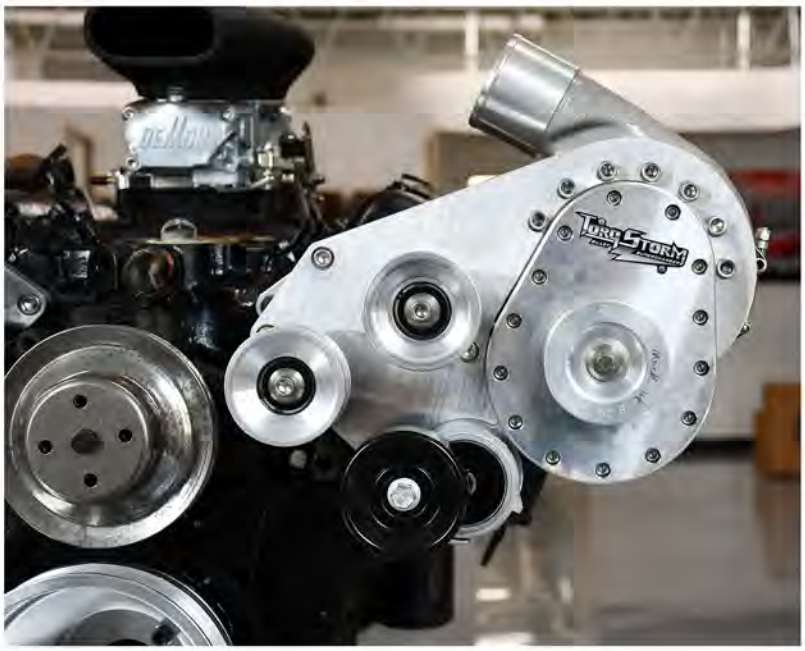

Re-install the tensioner and idlers. Be sure the tensioner is placed in the correct pin location.

Tighten to 29 ft lbs.

STEP 7

Install the supercharger head unit using (7) 3/8-16 x 1 1/4" bolts and washers. Tighten to 29 ft lbs. You may need to rotate the compressor housing to position the outlet to your liking. Loosen the nut on the v-band to do so. After positioning tighten the nut back so there is roughly 1/8-1/4" of thread showing, or until the housing is unable to rotate.

Do not overtighten or you will stretch the clamp out

STEP 8

For the passenger side, remove the supercharger tensioner and install supercharger bracket using (4) 3/8-16 x 3.25". Between the two brackets are (4) 2.250" spacers.

Tighten to 29 ft lbs

Re-install tensioner and idler.

Tighten to 29 ft. lbs



STEP 9

Install supercharger using (7) 3/8-16 x 1.25" bolts and AN washers.

Tighten to 29 ft lbs

STEP 10



Install supercharger belts. Use a 15mm long wrench on the bolt on the tensioner pulley pulling clockwise to release tension. Then slip the belt over the pulley.

STEP 11



You may need to rotate the compressor housing to position the outlet to your liking. Loosen the nut on the v-band to do so. There is an o-ring in the case to compressor housing. Be sure not to unseat the oring when rotating. After positioning, tighten the nut so there is roughly 1/8-1/4" of thread showing, or until the housing is unable to rotate.

Do not overtighten or you will stretch the clamp out.

STEP 12

Install the air filter and tube assembly on each supercharger. These come in standard length for the customer to trim to their vehicle.



STEP 13

The kit includes (1) ARP-K-CARB-HAT and (2) 52 mm BOV's as well as the aluminum weld in bungs. Connect them both to a vaccuum source off from the intake below the carb.





- *Replace all spark plugs with one or two heat ranges cooler.*
- *Fuel/ Ignition managment system must be tuned when installing Torqstorm Supercharger.*
- *Reconnect battery*
- *Double check all fittings, bolts, clamps. Make sure all wires and lines are properly secured with clamps or wire ties .*
- *Make sure fuel tank is filled with 91 octane or higher fuel.*
- *Start engine and allow to idle a few minutes then shut down.*
- *Recheck to be sure that no hoses, wires, ect are near the exhaust, headers, or supercharger components.*
- *Recheck tune before commencing test drive.*
- *After test drive examine all bolts, belts and check for leaks or running issues before finishing with the vehicle.*
- *Change your oil in the S/C every 10k miles or once a year. Failure to run Torqstorm approved oil will void warranty.* *Order direct from Torqstorm Part NO ARP-OIL-MTL*
- *Fill out warranty card and send it in 30 days from arrival of supercharger to qualify.*

Failure to do so may affect your limited lifetime warranty.

Additional information for Boost

- It is suggested to run a wideband o2 sensor to monitor correct air/fuel ratio. 11.5 is ideal for 91 octane or higher pump gas.

- PLEASE TAKE SPECIAL NOTE: Operating the vehicle without all the sub assemblies completed and properly installed and working may cause FAILURE OF MAJOR ENGINE COMPONENTS.

- If you have any questions or concerns contact us at sales@torqstorm.com

- Torqstorm superchargers come from the factory filled with 6 oz of ARP-OIL-MTL

-Supercharger is ready to run

HEAD BRACKET LAYOUT

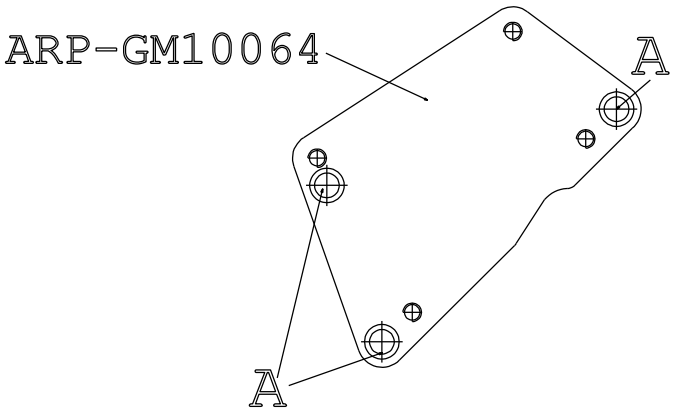

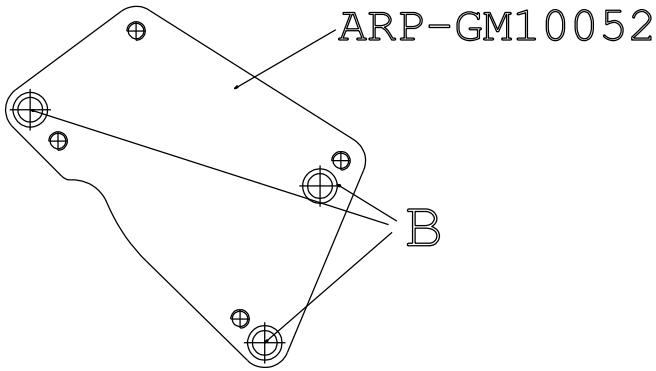

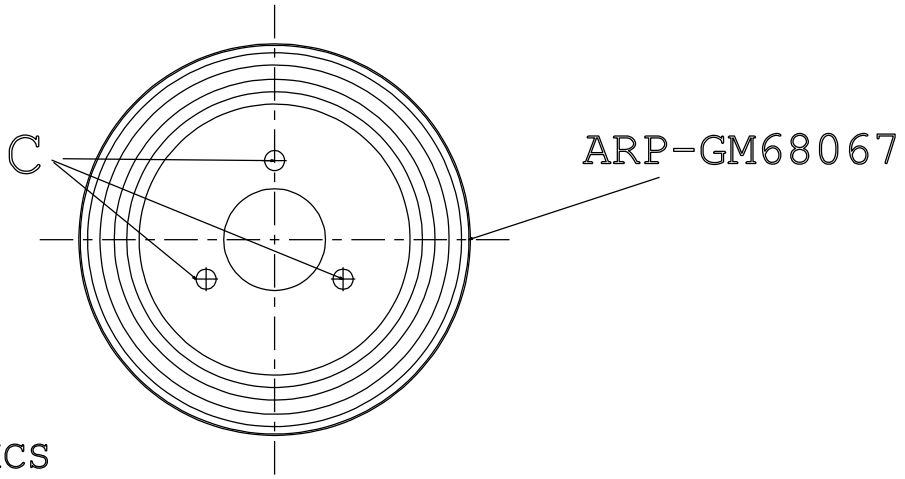

A = 3 @ 7/16-14 x 1.0 SS SHCS
or 3/8-16 x 1.0 SS SHCS with washers
B = 3 @ 7/16-14 x 1.0 SS SHCS
or 3/8-16 x 1.0 SS SHCS with washers
C = 3 @ 3/8-24 x 1.0 SS SHCS
or 3/8-16 x 1.0 SS SHCS

Description	HEAD BRACKET LAYOUT
Part #	ARP-K-GM-BBC-2XR

TORQSTORM® BILLET SUPERCHARGERS

11/12/2018

SUPERCHARGER BRACKET LAYOUT

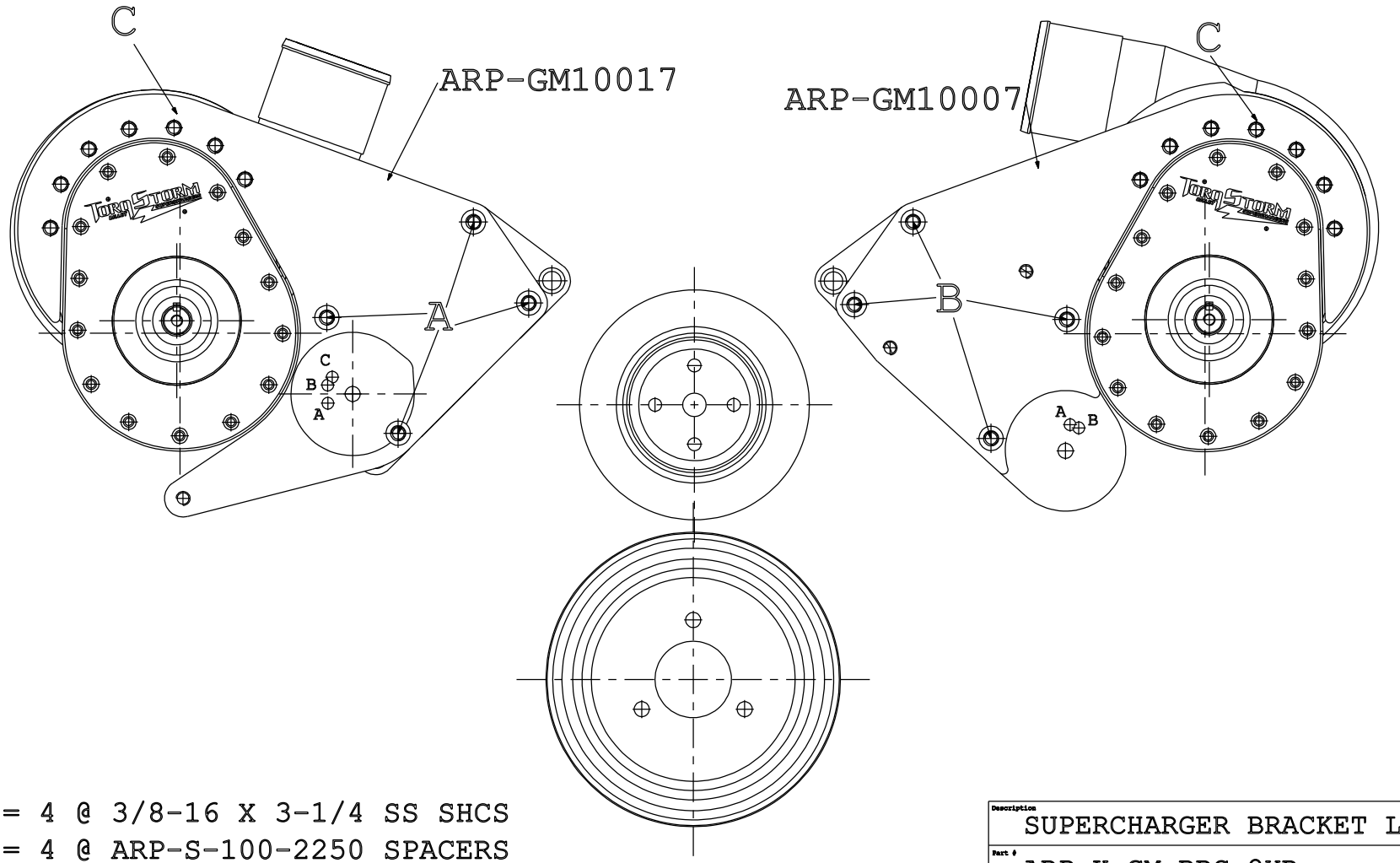

A = 4 @ 3/8-16 X 3-1/4 SS SHCS
A = 4 @ ARP-S-100-2250 SPACERS
B = 4 @ 3/8-16 X 4-1/4 SS SHCS
B = 4 @ ARP-S-100-3250 SPACERS
C = 14 @ 3/8-16 X 1-1/4 SS SHCS

Description
SUPERCHARGER BRACKET LAYOUT

Part #
ARP-K-GM-BBC-2XR

TORQSTORM® BILLET SUPERCHARGERS

11/12/2018

BELT ROUTING

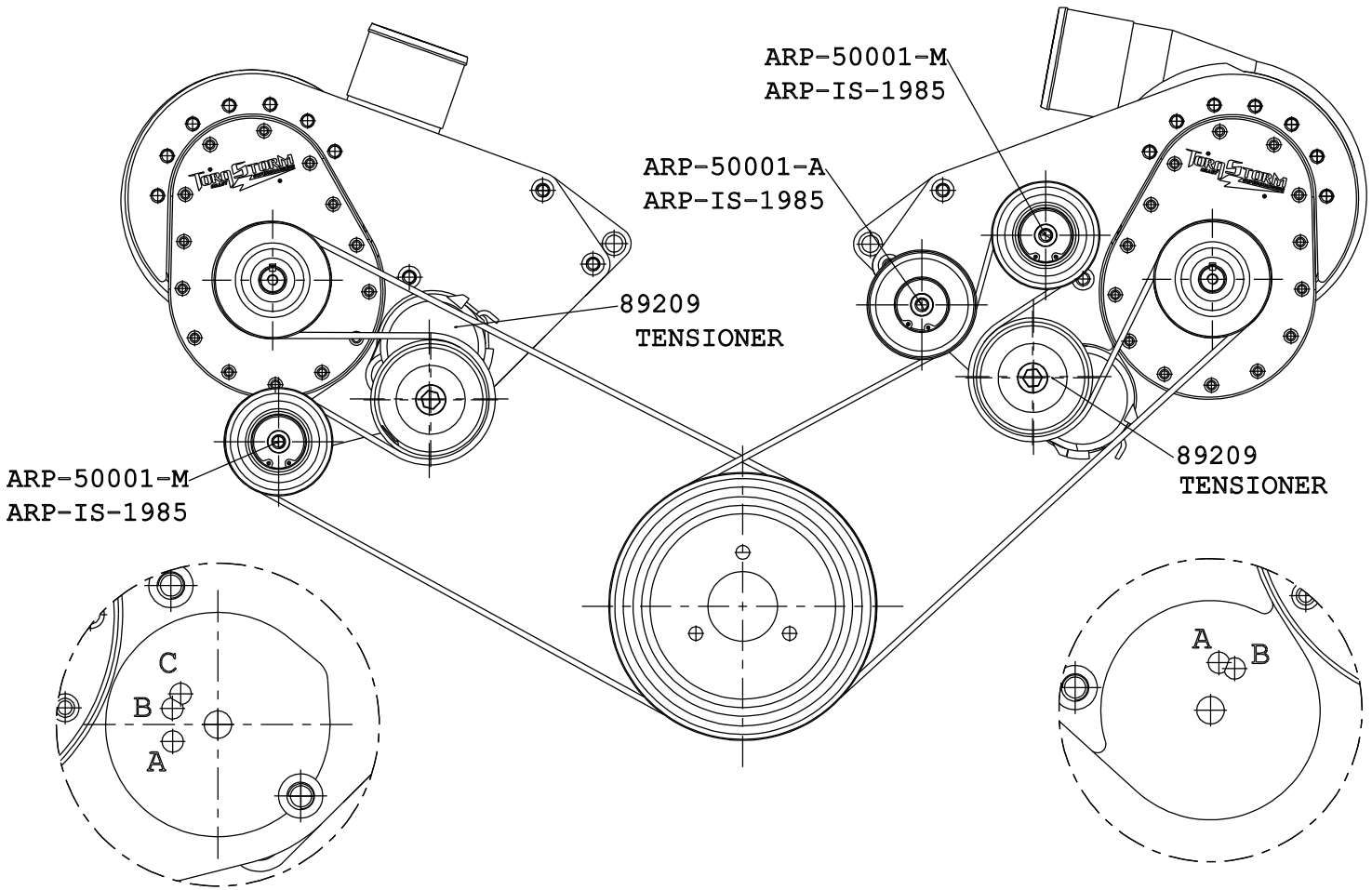

PASSENGER SIDE

3.10" PULLEY = PIN A = DAYCO 5080680
GATES K080680

3-1/4" PULLEY = PIN B = DAYCO 5080670
GATES K080670

3-1/2" PULLEY = PIN C = DAYCO 5080670
GATES K080670

4.0" PULLEY = PIN B = DAYCO 5080680
GATES K080680

DRIVERS SIDE

3.10" PULLEY = PIN A = DAYCO 5080680
GATES K080680

3-1/4" PULLEY = PIN A = DAYCO 5080680
GATES K080680

3-1/2" PULLEY = PIN B = DAYCO 5080680
GATES K080680

4.0" PULLEY = PIN A = DAYCO 5080700
GATES K080700

Description
CRANK PULLEY BELT ROUTING

Part #
ARP-K-GM-BBC-2XR

TORQSTORM® BILLET SUPERCHARGERS

04/12/2020